TEPRO '93

ȚEVI ȘI PROFILE

TUBES & PROFILES

IAȘI - ROMÂNIA

Scanned with OKEN Scanner

TEPRO

Str. Chişinăului nr.132
Telex 22297
Fax 098/125919
Telefon 098/ 136664
136320
130371
130720

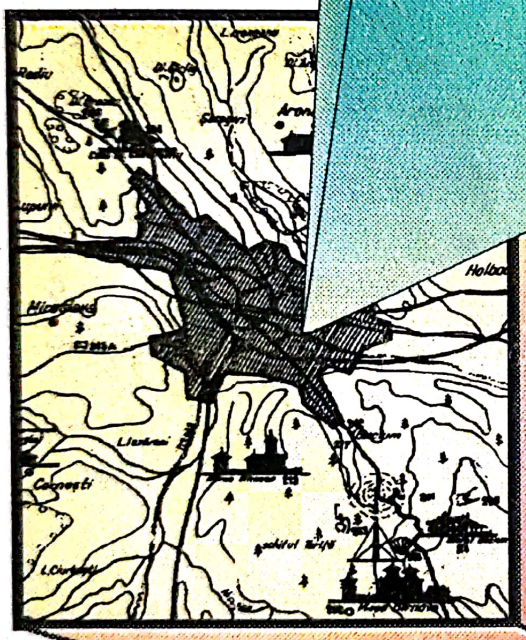

IAŞI

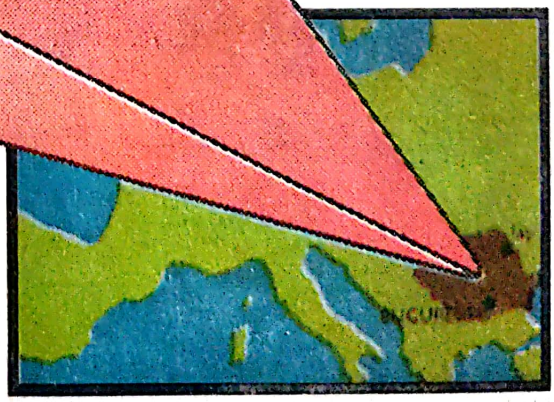

ROMÂNIA

Scanned with OKEN Scanner

Nemţişor Dan 1994

CUPRINS / CONTENTS

CUPRINS		CONTENTS
Generalităţi	2	*Generalities*
Materii prime	3	*Raw Materials*
Ţevi		*Tubes*
Ţevi pentru instalaţii	7	Tubes for Equipements
Ţevi pentru construcţii şi conducte	11	Tubes for Buildings and Pipes
Ţevi trase la rece	15	Cold Drawn Tubes
Tuburi de protecţie	19	Protection Tubes
Ţevi profilate	21	Shaped Tubes
Ţevi de precizie	31	Precision Tubes
Profile		*Profiles*
Condiţii generale de fabricaţie	41	General Conditions of Fabrication
Profile L	45	L Profiles
Profile U	48	U Profiles
Profile Z	54	Z Profiles
Profile T şi Ω	55	T and Ω Profiles
Profile pentru tîmplărie metalică	56	Profiles for Metallic Joinery
Profile speciale pentru autovehicule	59	Special Profiles for Motor Vehicles
Profile cu destinaţie specială	61	Profiles with Special Destination

Scanned with OKEN Scanner

GENERALITĂŢI

Societatea comercială „TEPRO" S.A. Iaşi unitate de frunte a siderurgiei româneşti, cunoaşte de la punerea în funcţiune a primelor capacităţi de producţie în anul 1963, o continuă dezvoltare, ajungînd în prezent una dintre marile unităţi prelucrătoare de produse metalurgice.

Amplasată în zona industrială,str. Chişinăului nr.132 a municipiului Iaşi, pe o suprafaţă de circa 43 de hectare, societatea dispune de capacităţi moderne de producţie ce permit prelucrarea a peste 600.000 tone de produse pe an, utilizînd ca materie primă bandă laminată la cald şi la rece din mărci de oţeluri diferite.

Procesele de fabricaţie sînt specializate în:

- fabricarea ţevilor sudate pe generatoare în gama dimensională ∅ 4.7 - ∅ 220 mm şi grosimi 0.7 - 8 mm, destinate utilizărilor în diverse domenii ca: instalaţii de transport fluide, industria constructoare de maşini, industria energetică, industria petrolului, mobilier şi articole de uz casnic etc.;

- fabricarea profilelor formate la rece prin îndoiri succesive, cu lăţimi desfăşurate de 30 - 1000 mm şi grosimea peretelui de 0.5 - 5 mm, destinate pentru uz general - profile cornier, U, Z, omega, profile pentru tîmplărie metalică, profile ondulate pentru acoperiri şi închideri de hale, profile de diverse forme cu destinaţie specială;

- fabricarea benzilor înguste laminate la rece şi la cald, activitate desfăşurată în special pentru consum propriu în producţia de ţevi şi profile;

Prezentul catalog se referă la primele două grupe de produse, cu ponderea cea mai mare în totalul producţie pentru care societatea este dotată cu utilaje moderne de laminare la rece şi la cald, tragerea la rece, tratament termic şi prelucrare prin aşchiere.

Produsele sînt fabricate în conformitate cu standardele româneşti (STAS) şi cu majoritatea standardelor de largă circulaţie internaţională (DIN, ASTM, BS, GOST etc.)

Societatea are în vedere toate acţiunile ce se impun pentru satisfacerea tuturor cerinţelor clienţilor. Menţionăm că tipodimensiunile prezentate nu epuizează posibilităţile de execuţie şi a altor tipuri de ţevi şi profile la cerinţele beneficiarilor.

Calitatea produselor este garantată şi atestată cu ajutorul unor echipamente perfecţionate de control distructiv şi nedistructiv manipulate de personal cu înaltă calificare.

GENERALITIES

"TEPRO" S.A. trading company, one of the best factories of the Roumanian metallurgy, has continuously developed since 1963 when the first equipments started functioning, becoming at present one of the greatest iron and steel processing factories.

Situated in the industrial area of Iaşi, Chişinău Street, 132, stretches for about 106 acre, this company holds up-to-date equipments which facilitate the processing of more than 600000 tons of products per year, using as a raw material colded and warmed rolled strips of different steel grades.

The manufacturing processes are specialized in:

- the manufacturing of the welded tubes on generatrix within a dimensional scale of ∅ 4,7 - ∅ 220 mm and a wall thickness of 0,7 - 8 mm made to be used in different fields of activity, such as fluids transport, equipments, power industry, oil industry, furniture and housewares;

- the manufacturing of cold forming profiles by successive bending with unrolled width of 30 - 1000 mm and the thickness of the wall of 0.5 - 5 mm, of general use; L, U, Z, omega profiles, profiles for metallic joinery, corrugated profiles for covering and closing the halls, profiles of different shapes with a special destination;

- the manufacturing of narrow cold and hot rolled strips which is carried on especially for internal consumption in the manufacturing of tubes and profiles.

This catalogue is restricted to the first two groups of products which share the greatest part of the whole production and for this the company is endowed with modern equipments for cold and hot rolling, cold drawn, heat treatment and splinting processing.

The products are manufactured according to the Roumanian standard (STAS) and to most of the international standards (DIN, ASTM, BS, GOST).

The Company is considering any activity that the customer needs. We must also mention that these models are not the only ones that can be manufactured; there are also possibilities of producing other kinds of tubes and profiles by customer's demand.

The quality of the products is guaranteed and certified by some improved equipments of destructive and nondestructive control which are manipulated by high trained staff.

Scanned with OKEN Scanner

Oţeluri utilizate la fabricarea ţevilor sudate şi profilelor îndoite

Steels Used in the Manufacturing of Welded Tubes and Bent Profiles

Nr	Marca oţel / Steel grade	Clasa de calitate / Quality class	Grad de dezoxid. / Deoxid. degree	Compoziţia chimică / Chemical requirements max %						Caracteristici mecanice / Mechanical characteristics		
				C	Mn	Si	Al	P	S	Limită de curgere Flow limit Rp0.2 [N/mm²]	Rezist. tracţiune Tensile strength [N/mm²]	Alungire rupere Yield point A %
STAS 500/2-80												
1	OL 32	1;1a;1b	n	0.15	0.60	0.07	-	0.055	0.055	180	310-390	33
			s			0.17						
			k			0.50						
2	OL 34	1;1a;1b	n	0.17	0.60	0.07	-	0.055	0.055	210	340-410	31
			s			0.17						
			k			0.50						
3	OL 37	1;1a;1b	n	0.25	0.85	0.07	-	0.065	0.065	240	360-440	25
			s			0.17						
			k			0.50						
4	OL 37	2	n	0.22	0.85	0.07	-	0.055	0.055	240	360-440	25
			s			0.17						
			k			0.50						
5	OL 42	1;1a;1b	n	0.31	0.85	0.07	-	0.065	0.065	260	410-490	22
			s			0.17						
			k			0.50						
6	OL 42	2	n	0.31	0.85	0.07	-	0.055	0.055	260	410-490	22
			s			0.17						
			k			0.50						
STAS 9724-90												
7	B1	-	k	0.25	0.65	0.55	-	0.085	0.065	-	250-490	-
8	B2	-	n	0.12	0.50	0.07	-	0.055	0.055	170	280-440	23
			k			-	0.02					
STAS 880-88												
9	OLC 10	-	K	0.07 - 0.14	0.35-0.65	0.17-0.37	0.02-0.045	max 0.040	max 0.045	206	min 321	min 31
		s							0.02-0.045			
		x						max 0.035	max 0.035			
		xs							0.02-0.040			
10	OLC 20	-	K	0.17 - 0.24	0.30-0.60	0.17-0.37	0.02-0.045	max 0.040	max 0.045	250	min 410	25
		s							0.02-0.045	350	550-700	20
		x						max 0.035	max 0.035			
		xs							0.02-0.040			
STAS 9485-80												
11	A1	-	n	0.15	max 0.50	max 0.050	-	0.055	0.055	-	270-410	26
			k	0.13			min 0.015					
12	A2	-	n	0.15	max 0.50	max 0.050	-	0.045	0.045	260	270-390	30
			k	0.13			min 0.015					
13	A3	-	n	0.13	max 0.45	max 0.050	-	0.035	0.040	240	270-370	34
			k	0.11			0.02-0.1					

Scanned with OKEN Scanner

Corespondenţa mărcilor de oţeluri utilizate la fabricarea ţevilor sudate şi profilelor îndoite

The Corespondence of the Steel Grade Used in the Manufacturing of the Welded Tubes and Bent Profiles

Nr	Marcă oţel / Steel grade	Clasa de calitate / Quality class	Grad de dezoxid / Deoxid. degree	NF A35-501-77	DIN 17.100-80	BS 4360-1979	AISI SAE ASTM	JIS G3101-76 G3106-77	GOST 380-71	MSZ 500-74 6280-74	PN 72/H-84020	ISO 630
STAS 500/2-80												
1	OL 32	1;1a;1b	n	-	USt 33-1	-	-	-	St 1 kp	-	-	Fe 310-0
			s		-				St 1 ps			
			k		RSt 33-1				St 1 sp			
2	OL 34	1;1a;1b	n	A 34-1	USt 34-1	-	-	Cls. 1 SS 34	St 2 kp	A(B) 34X	St 2 s	-
			s		-				St 2 ps	A(B) 34Y	-	
			k		RSt 34-1				St 2 sp	A(B) 34B	-	
3	OL 37	1;1a;1b	n	E 24-1	USt 37-1	-	-	-	St 3 kp	A(B) 38X	St 3SX	-
			s		-				St 3 sp	A(B) 38Y	St 3SY	
			k		RSt 37-1				St 3 ps	A(B) 38B	St 3S	
		2	n	E 24-2	USt 37-2	40 B	A 283 gr.C A 283 gr.D A 570 gr.C	-	St 3 kp	-	St 3VX	Fe 360-B
			s		-				St 3 sp		St 3VY	-
			k		RSt 37-2				St 3 ps	37 B	St 3V	Fe 360-B
4	OL 42	1;1a;1b	n	E 26-1	USt 42-1	43 A	-	Cls. 2 SS 41	St 4 kp	-	St 4SX	-
			s		-				St 4 sp	A(B) 44Y	St 4SY	
			k		RSt 42-1				St 4 ps	-	St 4S	
		2	n	E 26-2	USt 42-2	43 B	A 36 A 570 gr.D A 709 gr.36	Cls. 1 A SM 41 A	St 4 kp	-	St 4VX	-
			s		-				St 4 sp	-	St 4VY	
			k		RSt 42-2				St 4 ps	A 44 B	St 4V	

STAS 880-88				NF A 35-551-72 A 35-552-72	DIN 17200-69 17210-69	BS 970;Part.1;1972	AISI SAE ASTM	JIS G 4051-65	GOST 1050-74	MSZ 31-74;61-74	PN 75-H/84019	ISO R 683 T1
5	OLC 10 (OLC 08)	-	-	CC 10	C10(1.0301)	045 A 10	1010	-	-	-	10	C10
		x		XC 10	Ck10(1.1121)	-	-	S 10 C	10	C 10	-	
6	OLC 20	-		CC 20	-	050 A 20	1020	-	-	-	20	C20
		x		-	-	-	-	S 20 C	20	-	-	

STAS 9485-80				NF A 36-401-69 A 36-301-71	DIN 1623-72 1614-74	BS 1449;Part.1; 1972	ASTM SAE	JIS G 3131-77 G 3141-77	GOST 4041-71 9045-70	MSZ	PN	ISO
7	A1	-	-	TC	St 12(1.0330)	CR 4	A 366 / 1012	Cls. 1 SPCC	BG (08 kp)	-	-	CR2;CR22;CR27
8	A2	-	-	E	St 13(1.0333)	CR 3-CR 2	A 619 / 1008	Cls. 2 SPCD	CB (08 ps)	-	-	CR3;CR23;CR3ZE
9	A3	-	-	ES	St 14(1.0338)	CR 1	A 620 / 1006 calmat \ 1008	Cls. 3 SPCEN	OCB (08 ju)	-	-	CR4;CR24;CR4ZE

Scanned with OKEN Scanner

TEVI

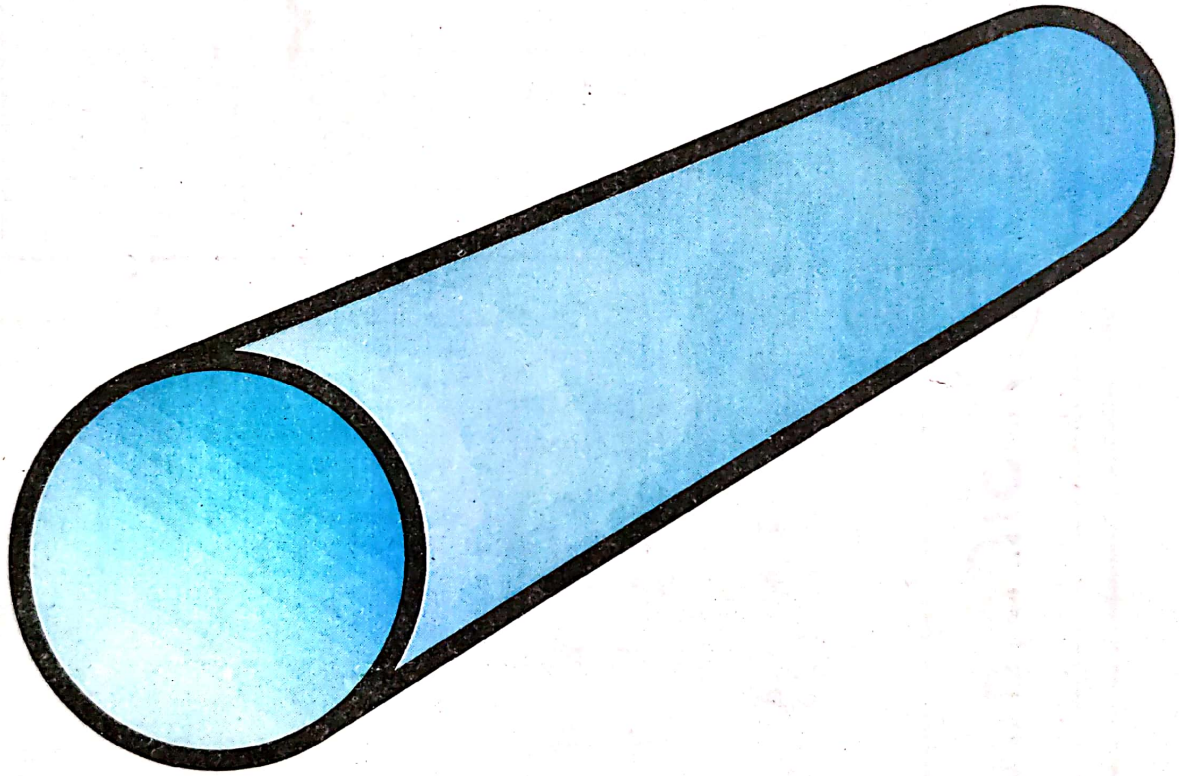

TUBES

Scanned with OKEN Scanner

Traseul tehnologic / Technological Line

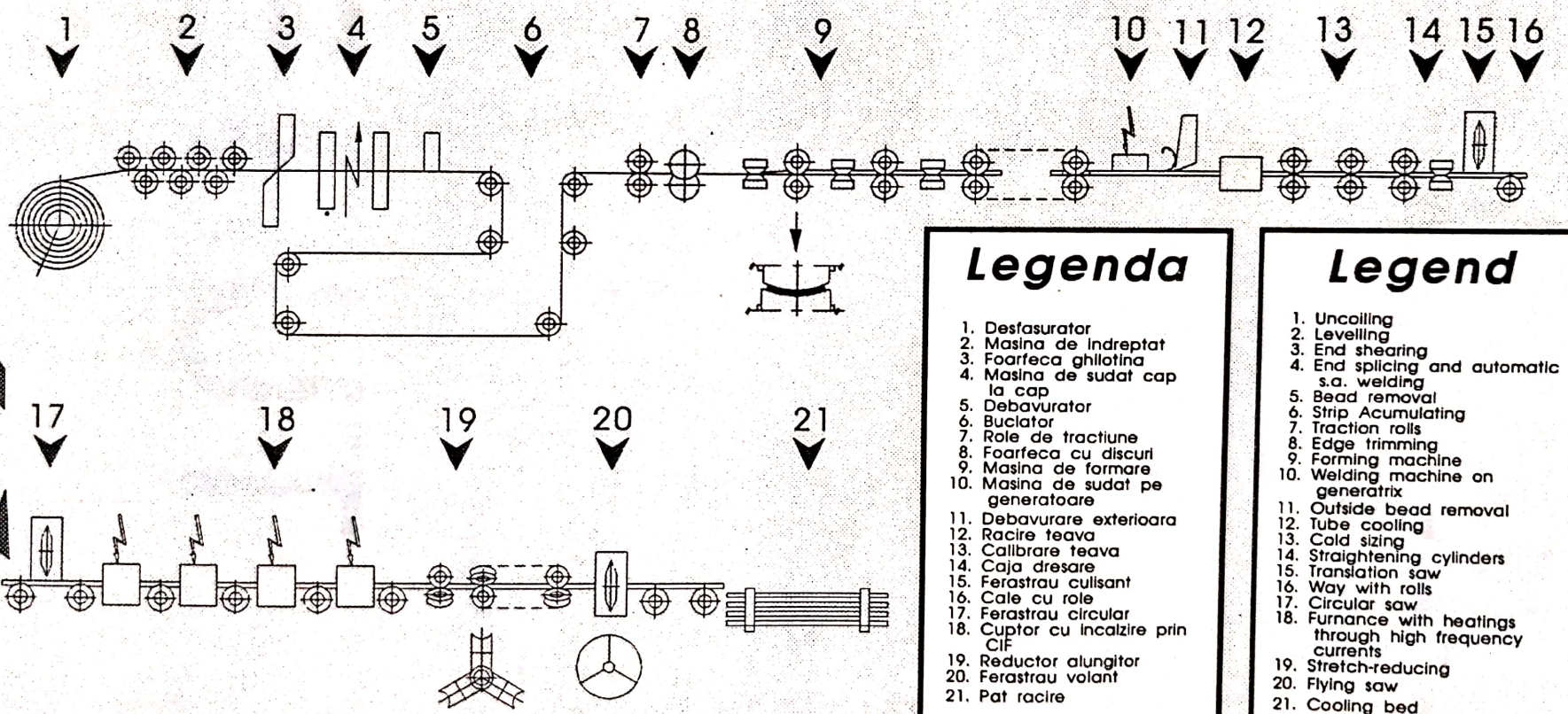

Legenda

1. Desfasurator
2. Masina de indreptat
3. Foarfeca ghilotina
4. Masina de sudat cap la cap
5. Debavurator
6. Buclator
7. Role de tractiune
8. Foarfeca cu discuri
9. Masina de formare
10. Masina de sudat pe generatoare
11. Debavurare exterioara
12. Racire teava
13. Calibrare teava
14. Caja dresare
15. Ferastrau culisant
16. Cale cu role
17. Ferastrau circular
18. Cuptor cu incalzire prin CIF
19. Reductor alungitor
20. Ferastrau volant
21. Pat racire

Legend

1. Uncoiling
2. Levelling
3. End shearing
4. End splicing and automatic s.a. welding
5. Bead removal
6. Strip Acumulating
7. Traction rolls
8. Edge trimming
9. Forming machine
10. Welding machine on generatrix
11. Outside bead removal
12. Tube cooling
13. Cold sizing
14. Straightening cylinders
15. Translation saw
16. Way with rolls
17. Circular saw
18. Furnance with heatings through high frequency currents
19. Stretch-reducing
20. Flying saw
21. Cooling bed

Scanned with OKEN Scanner

Ţevi din oţel sudate longitudinal pentru instalaţii

Longitudinally Welded Steel Tubes for Different Equipements

Norme de fabricaţie **Standards**	STAS 7656-90 ISO 65-81 DIN 2440-78;DIN 2441-78 GOST 3262-75 ASTM A120-83;A53-88 NF A49-145/1975 BS 1387-85

Stare de livrare / State of Delivery		Dimensiuni / Dimensions inch
NN	Negre, Netede Black, Plain end	3/8 - 8
NFM	Negre, Filetate cu Mufă Black, Threaded and coupled	1/2 - 4 1/2 - 2 cf.ASTM
ZN	Zincate, Netede Zinc coating, Plain end	1/2 - 4
ZFM	Zincate, Filetate cu Mufă Zinc coating, Threaded and coupled	1/2 - 4 1/2 -2 cf. ASTM

Material	Norma de fabricaţie Standard
OL 32; OL 34; OL 37	STAS 500/2-80
St 33; St 37-2; USt 37-2; RSt 37-2	DIN 17100-80
St 1kp; St 1ps; St 1sp St 2kp; St 2ps; St 2sp St 3kp; St 3ps; St 3sp	GOST 380-71
08kp; 08ps; 08 10kp; 10ps; 10	GOST 1050-74
gr. A	ASTM A53-88

Scanned with OKEN Scanner

Dimensiuni şi mase / Dimensions and Weights

Diametrul nominal Nominal Diameter		Diametrul exterior Outside Diameter [mm]			Serie medie Medium Series			Serie grea Heavy Series			Serie uşoară Light Series		
mm	inch	de calc.	max.	min.	Grosime perete Wall Thickness g [mm]	Masa lin. pt. starea Weight for State [kg/m] NN	NFM	Grosime perete Wall Thickness g [mm]	Masa lin. pt. starea Weight for State [kg/m] NN	NFM	Grosime perete Wall Thickness g [mm]	Masa lin. pt. starea Weight for State [kg/m] NN	NFM
10	3/8	17.2	17.5	16.7	2.3	0.839	-	2.9	1.02	-	2.0	0.742	-
15	1/2	21.3	21.8	21.0	2.6	1.21	1.22	3.2	1.44	1.45	2.3	1.08	-
20	3/4	26.9	27.3	26.5	2.6	1.56	1.57	3.2	1.87	1.88	2.3	1.39	-
25	1	33.7	34.2	33.3	3.2	2.41	2.43	4.0	2.93	2.95	2.9	2.20	2.22
32	1¼	42.4	42.9	42.0	3.2	3.10	3.13	4.0	3.79	3.82	2.9	2.82	2.85
40	1½	48.3	48.8	47.9	3.2	3.56	3.60	4.0	4.37	4.41	2.9	3.24	3.28
50	2	60.3	60.8	59.7	3.6	5.03	5.10	4.5	6.19	6.26	3.2	4.49	4.56
65	2½	76.1	76.6	75.3	3.6	6.42	6.54	4.5	7.93	8.05	3.2	5.73	5.85
80	3	88.9	89.5	88.0	4.0	8.36	8.53	5.0	10.30	10.50	3.6	7.55	7.72
100	4	114.3	115.0	113.1	4.5	12.20	12.50	5.4	14.50	14.80	4.0	10.80	11.10
125	5	139.7	140.8	138.5	5.0	16.60	-	5.4	17.90	-	-	-	-
150	6	165.1	166.5	163.9	5.0	19.80	-	5.4	21.30	-	-	-	-

Dimensiuni şi mase / Dimensions and Weights

ASTM A120-85 A53-88

Diametrul exterior Outside Diameter		Grosimi de perete / Wall Thickness [mm/inch]																	
		2.77	2.87	3.02	3.18	3.38	3.56	3.68	3.91	3.96	4.78	5.16	5.56	6.02	6.35	7.04	7.11	7.92	8.18
		0.109	0.113	0.119	0.125	0.133	0.140	0.145	0.154	0.156	0.188	0.203	0.219	0.237	0.250	0.277	0.280	0.312	0.322
mm	inch	Masa liniară / Weight [kg/m -lb/ft]																	
21.3	1/2	1.27 0.85																	
26.7	3/4		1.69 1.13																
33.4	1	2.09 1.40				2.50 1.68													
42.2	1¼	2.69 1.81					3.39 2.27												
48.3	1½	3.11 2.09						4.05 2.72											
60.3	2	3.93 2.64							5.44 3.65										
88.9	3			6.40 4.29						8.29 5.57									
114.3	4			8.29 5.57	8.71 5.84					10.78 7.24	12.91 8.66		14.91 10.01	16.07 10.79					
168.3	6										19.27 12.92		22.31 14.98		25.36 17.02		28.26 18.97	31.32 21.04	
219.1	8											27.22 18.26	29.28 19.66		33.31 22.36	36.81 24.70		41.24 27.70	42.55 28.55

Scanned with OKEN Scanner

Grosime strat zinc Zinc coat thickness	min. 56μ(400 g/m²) max. 80μ(575 g/m²)
Adaos de zinc la masa totală a ţevii zincate Addition of zinc at the total weight of the zinc-coated tube	4.3% 5.7% cf.ASTM

Mufă Sleeve	STAS 5560-81
* Filet ţeavă şi mufă Tube thread and coupling	STAS 402-88 ASTM-ANSI/ASME B.I. 20-1-1983

* Filetul ţevii este executat conic dreapta şi al mufei cilindric dreapta.
Tube thread is conically performed to the right and the coupling one cylindrically to the left.

Profilul filetului
Thread Profile

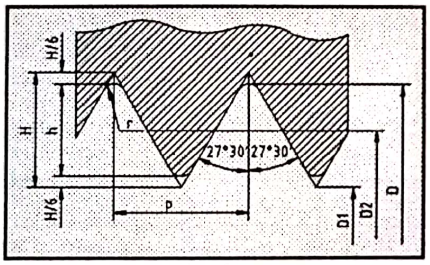

Filet cilindric interior
Inside cylindrical thread

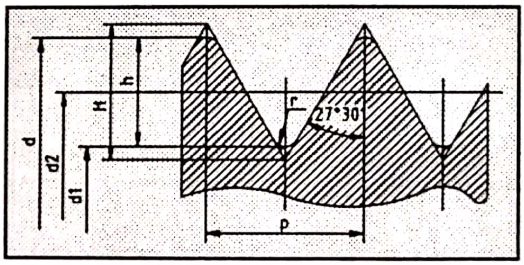

Filet conic exterior
Outside conic thread

Dimensiuni nominale / Nominal Dimensions

Simbolul mărimii filetului Symbol of Thread Size	Nr. de paşi pe 25.4 mm No. of Pitch on 25.4 mm z	Pasul filetului Thread Pitch p	Înălţimea filetului Thread Height	Diametrul filetului în planul de bază Thread Diameter in the Base Plane			Raza de racordare Connection radius r
				Exterior Outside $d=D$	Mediu Medium $d_2=D_2$	Interior Inside $d_1=D_1$	
1/2	14	1.814	1.162	20.955	19.793	18.631	0.249
3/4	14	1.814	1.162	26.441	25.279	24.117	0.249
1	11	2.309	1.479	33.249	31.770	30.294	0.317
1¼	11	2.309	1.479	41.910	40.431	38.952	0.317
1½	11	2.309	1.479	47.809	46.324	44.845	0.317
2	11	2.309	1.479	59.614	58.135	56.656	0.317
2½	11	2.309	1.479	75.184	73.705	72.226	0.317
3	11	2.309	1.479	87.884	86.405	84.926	0.317
4	11	2.309	1.479	113.030	111.551	110.072	0.317

Scanned with OKEN Scanner

Lungimea de măsurare, lungimea utilă şi toleranţa de asamblare

Measuring Length, Useful Length, and Assembling Tolerance

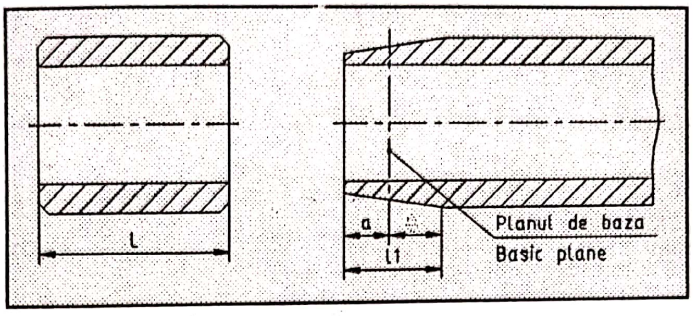

Simbol filet ţeavă Symbol of Thread Tube	Nr. de paşi pe 25.4mm No. of Pitch on 25.4mm	Lungimea de măsurare Measuring Length a[mm]			Lungimea utilă a filetului Useful Length for the Thread $l_1 \geq a+b$[mm]			Toleranţa de asamblare Assembling Tolerance b[mm]		Simbol filet mufă Symbol of Thread Coupling	Lungime max. a mufei Max. Length of coupling STAS 5560-81 L[mm]
		nom.	max.	min.	nom.	max.	min.	aprox.	paşi		
R 1/2	14	8.2	10.0	6.4	13.2	15.0	11.4	5.0	2¾	Rp 1/2	34
R 1/4	14	9.5	11.3	7.7	14.5	16.3	12.7	5.0	2¾	Rp 3/4	36
R 1	11	10.4	12.7	8.1	16.8	19.1	14.5	6.4	2¾	Rp 1	43
R 1¼	11	12.7	15.0	10.4	19.1	21.4	16.8	6.4	2¾	Rp 1¼	48
R 1½	11	12.7	15.0	10.4	19.1	21.4	16.8	6.4	2¾	Rp 1½	48
R 2	11	15.9	18.2	13.8	23.4	25.7	21.1	7.5	3¼	Rp 2	56
R 2½	11	17.5	21.0	14.0	26.7	30.2	23.2	9.2	4	Rp 2½	65
R 3	11	20.6	24.1	17.1	29.8	33.3	26.3	9.2	4	Rp 3	71
R 4	11	25.4	28.9	21.9	35.8	39.3	32.3	10.4	4½	Rp 4	83

Lungimi de livrare / Length of Delivery	- de fabricaţie / manufacturing 4-8 m - fixe, în cadrul lungimii de fabricaţie fixed, as part of the manufacturing length

Abateri limită / Limit Deviation	
Grosimea de perete / Wall Thickness	± 12.5%
Lungime / Length	±100 mm
Rectilinitatea / Rectilinearity	1.5 mm/m
Masa pe fiecare ţeavă / Weight for Each Tube	±10%

Abateri limită la diametru / Limit Deviations on Diameter ASTM	
1/2 - 1½"	+1/32" (0.8 mm) ; -1/64" (0.4 mm)
2 - 8"	± 1%

Scanned with OKEN Scanner

Ţevi din oţel sudate longitudinal pentru construcţii şi conducte

Longitudinally Welded Structural tubes and Pipes Lines

Norme de fabricaţie **Standards**	STAS 7657-90; STR MIM 331-86 ISO 4200-80 DIN 2458-81; DIN 1626-65; DIN 1626-84 GOST 10704-76; GOST 10705-80 BS 6363-83; BS 1139-82

Starea de livrare pt. ţevi construcţii **State of Delivery for Structural Tubes**	
CMH	Garantarea compoziţiei chimice, a caracteristicilor mecanice şi a etanşeităţii Warranty of chemical composition, mechanical characteristic and tightness
M	Garantarea caracteristicilor mecanice Warranty of mechanical characteristic

Material	**Normă de fabricaţie** **Standard**
OL 32; OL34; OL37; OL42; OL44	STAS 500/2-80
USt 37-2; RSt37-2; St33	DIN 17100-80
St 1kp; St 1ps; St 1sp; St 2kp; St 2ps; St 2sp; St 3kp; St 3ps; St 3sp; St 4kp; St 4ps; St 4sp	GOST 380-71
08kp; 08ps; 08; 10kp; 10ps; 10	GOST 1050-74

Scanned with OKEN Scanner

Dimensiuni şi mase / Dimensions and Weights													
Diametrul exterior Outside Diameter [mm]	Grosimea peretelui / Wall Thickness [mm]												
	2	2.3	2.6	2.9	3.2	3.6	4	4.5	5	5.6	6.3	7.1	8
	Masa liniară / Weight [kg/m]												
17.2	0.750	0.845	0.936	1.02									
21.3	0.952	1.08	1.20	1.32	1.43								
26.9	1.23	1.40	1.56	1.72	1.87								
33.7	1.56	1.78	1.99	2.20	2.41	2.67	2.93						
42.4	2.0	2.27	2.55	2.82	3.09	3.44	3.79						
48.3	2.28	2.59	2.93	3.25	3.56	3.97	4.37						
51	2.42	2.76	3.10	3.44	3.77	4.21	4.64						
57	2.71	3.10	3.49	3.87	4.25	4.74	5.23						
60.3	2.88	3.27	3.70	4.11	4.51	5.03	5.55	6.19					
63.5	3.03	3.47	3.90	4.33	4.76	5.32	5.87	6.55					
70			4.32	4.80	5.27	5.90	6.51	7.27					
76.1				5.24	5.75	6.44	7.11	7.95					
88.9					6.76	7.57	8.38	9.37	10.3				
108					8.27	9.27	10.3	11.5	12.7				
114.3					8.77	9.83	10.9	12.2	13.5	15.0	16.8		
133						11.5	12.7	14.3	15.8	17.6	19.7		
139.7								15.0	16.6	18.5	20.7		
159								17.1	19.0	21.2	23.7	26.6	
165.1								17.8	19.7	22.0	24.7	27.7	
168.3								18.2	20.1	22.5	25.2	28.2	31.6
219.1									26.4	29.5	33.1	37.1	41.6

= ţevi conducte / pipes

Scanned with OKEN Scanner

Abateri limită / Limit Deviations		
Diametrul exterior Outside Diameter		± 1 % min. ± 0.5 mm
Grosime de perete Wall thickness	< 3 mm	+ 0.30 mm - 0.25 mm
	≥ 3 mm	+ 0.45 mm - 0.35 mm
Lungime Length		± 100 mm
Masa pe fiecare teava Weight on Each Length		± 10 %

Lungimi de livrare / Delivery Length	
$D_e \leq 114.3$ mm	4 - 8 m
$D_e > 114.3$ mm	5 - 12.5 m
fixe, în cadrul lungimilor de fabricatie / Fixed, as part of the manufacturing length	

Încercarea la presiune hidrostatica / Testing at Hidrostatical Pressure	
Ţevi construcţii Structural Tubes	min. 50 bar
* Ţevi conducte Pipes	30 - 90 bar

* = presiunea de încercare se calculează cu formula / the test pressure is calculated according to the following formula

$$B \geq 7.7 \qquad p = \frac{2S}{B - 1}$$

S = tensiunea admisă în peretele ţevii / admissible tension in the wall tube

$$B = \frac{D_e}{g}$$

D_e = diametrul exterior / outside diameter

g = grosimea de perete / wall thickness

Scanned with OKEN Scanner

Scanned with OKEN Scanner

Ţevi din oţel sudate longitudinal trase sau laminate la rece

Cold Drawn or Cold Rolled Longitudinally Welded Tubes

Norme de fabricaţie **Standards**	STAS 8726-90 DIN 2394-81

Mod de execuţie **Execution Mode**	TR	trase la rece cold drawn
	LR	laminate la rece cold rolled

Stare de livrare **State of Delivery**	fără tratament without treatment
	recopt (la cerere) reheat (on demand)

Material	**Norma de fabricaţie** Standards
OL 32 B 2 USt 12	STAS 500/2-80 STAS 9724-90 DIN 1623/1-72

Lungime de livrare Delivery Length	- de fabricaţie / manufacturing 4-8 m - fixe, în cadrul lungimii de fabricaţie fixed, as part of the manufacturing length

Scanned with OKEN Scanner

Dimensiuni şi mase / Dimensions and Weights								
Diametrul exterior	Grosimea peretelui / Wall Thickness [mm]							
Outside Diameter [mm]	1.0	1.25	1.5	2.0	2.5	3.0	3.5	4.0
	Masa liniară / Weight [kg/m]							
10	0.222	0.270	0.314					
12	0.271	0.331	0.388	0.493				
14	0.321	0.393	0.462	0.592				
15	0.345	0.424	0.499	0.641				
16	0.370	0.455	0.536	0.691				
18	0.419	0.516	0.610	0.789	0.956	1.11		
20	0.469	0.578	0.684	0.888	1.08	1.26		
22	0.518	0.640	0.758	0.986	1.20	1.41		
25	0.592	0.732	0.869	1.130	1.39	1.63		
28	0.666	0.825	0.980	1.280	1.57	1.85		
30	0.715	0.886	1.050	1.380	1.70	2.0		
32	0.765	0.948	1.130	1.480	1.82	2.15		
33	0.789	0.979	1.170	1.530	1.88	2.22	2.55	2.86
34	0.814	1.010	1.200	1.580	1.94	2.29	2.63	2.96
35		1.040	1.240	1.630	2.00	2.37	2.72	3.06
36		1.070	1.280	1.680	2.07	2.44	2.81	3.16
38		1.130	1.350	1.780	2.19	2.59	2.98	3.35
40		1.190	1.420	1.870	2.31	2.74	3.15	3.55
42			1.500	1.970	2.44	2.89	3.32	3.75
45			1.610	2.120	2.62	3.11	3.58	4.04
48			1.720	2.270	2.81	3.33	3.84	4.34
50			1.790	2.370	2.93	3.48	4.01	4.54
51			1.830	2.420	2.99	3.55	4.10	4.64
54			1.940	2.560	3.18	3.77	4.36	4.93
57			2.050	2.710	3.36	4.00	4.62	5.23
60			2.160	2.860	3.55	4.22	4.88	5.52
63.5			2.290	3.030	3.76	4.48	5.18	5.87
70			2.530	3.350	4.16	4.96	5.74	6.51
76			2.760	3.650	4.63	5.40	6.26	7.10

Scanned with OKEN Scanner

Caracteristici mecanice / Mechanical Characteristics		
Stare de livrare State of delivery	Rezistenţă la rupere Yield strength R_m [N/mm²] min.	Alungire la rupere Yield point A_5 [%] min.
Fără tratament Without treatment	300	6
Recopt Reheated	270	25

Abateri limită / Limit Deviations		
Diametrul exterior Outside Diameter [mm]	Clasa de execuţie Execution Class A	Clasa de execuţie Execution Class B
≤ 30 > 30..≤ 50 > 50	± 0.30 mm ± 0.40 mm ± 0.80 %	± 0.15 mm ± 0.20 mm ± 0.50 %
Grosimea peretelui Wall Thickness [mm]	± 0.12 mm ± 10 %	prin acord între părţi by mutual agreement
≤ 1.5 > 1.5		
Lungimi / Length : - fixe / fixed - multiple		+ 100 mm 0
Rectiliniaritate pt. D > 16 mm Rectilinearity for		≤ 1.5 mm/m
Masa / Weight : - pe fiecare ţeavă / on each length - pe lot de ţevi vagonabil de min 10 t on the carload lot of min. 10 t		± 7.5 %

Scanned with OKEN Scanner

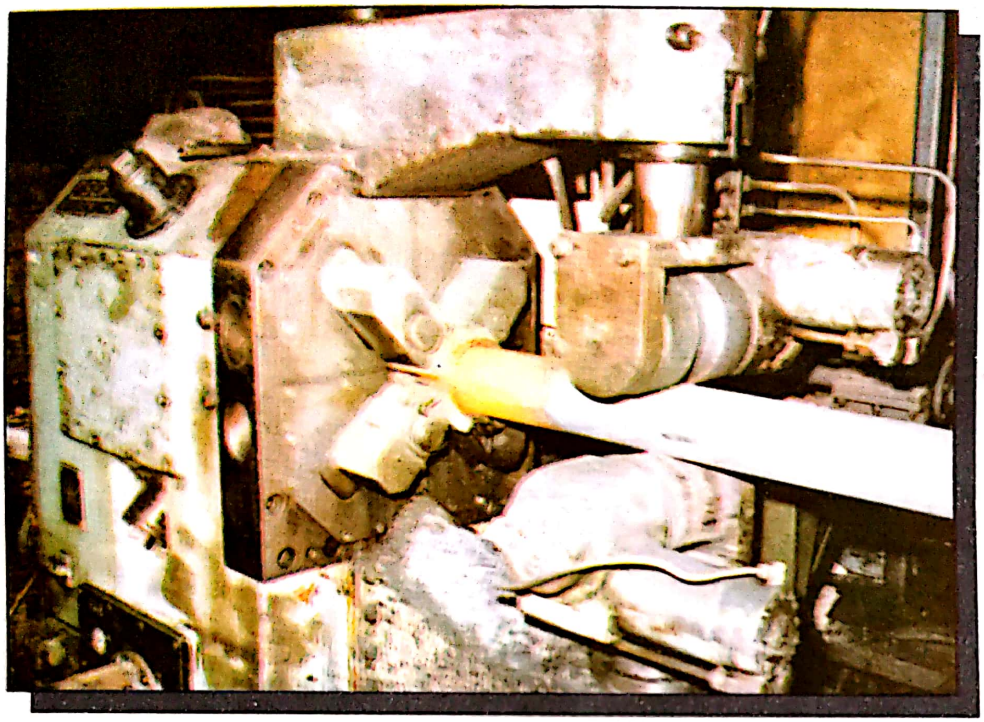

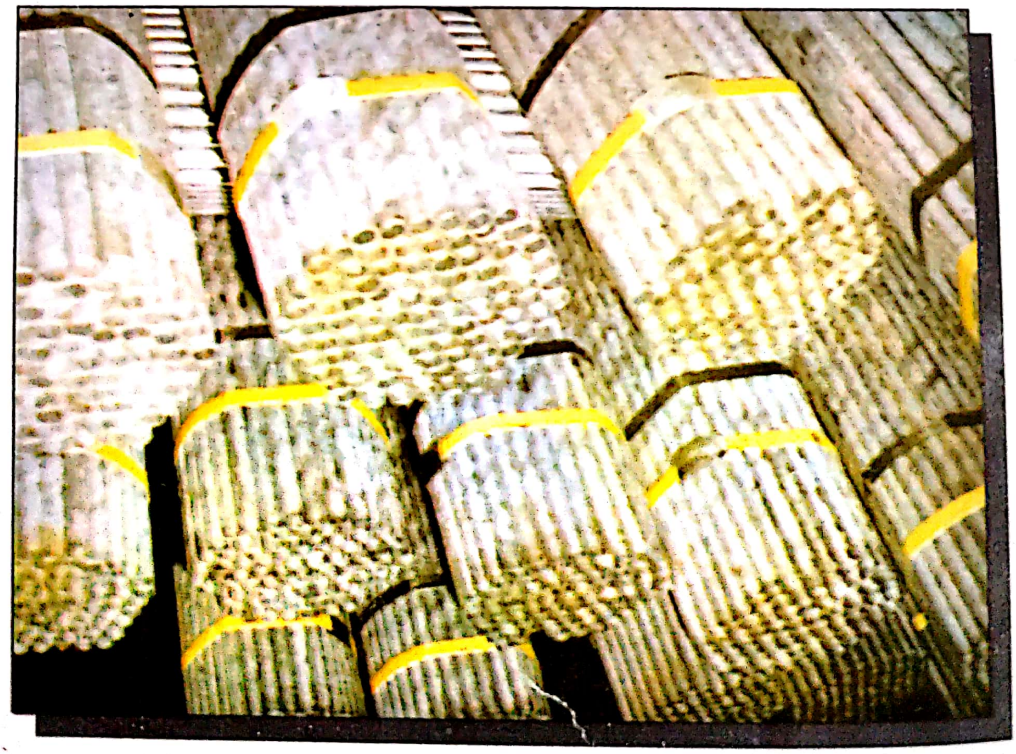

Scanned with OKEN Scanner

Tuburi de protecţie (PEL) cu manşoane
Protection Tubes with Muffs

Norma de fabricaţie / Standard	STAS 7933-88

Starea de livrare / State of Delivery	
Tub / Pipe PEL	- Protecţie-Etanş-Lăcuit - Protection-Tight-Varnished

Material	Norma de fabricaţie / Standard
OL 32	STAS 500/2-80

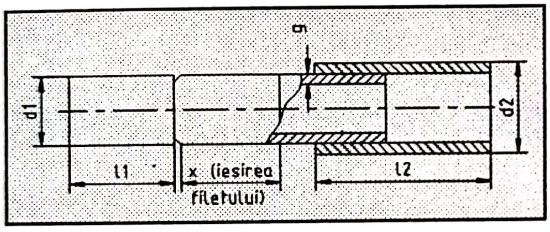

Formă capăt filetat cu manşon

Form of the Threaded End With Muff

Abateri limită / Limit Deviations

Mărimea nominală Nominal Size	Tubul Pipe						Manşon Muff			Masa teoretică Weight	
	Diam. exterior Outside Diameter d_1 [mm]		Gros. peretelui Wall Thickness g [mm]		Lung. filet Thread Length l_1 [mm]	Ieşire filet End of the Thread x_1 [mm]	Diam. ext. Outside Diam. d_2 [mm]	Lungimea Length l_2 [mm]		Tub Pipe [kg/m]	Manşon Muff [kg/100buc.]
	Nominal	Abateri limită Limit Deviations	Nominal	Abateri limită Limit Deviations				Nominal	Abateri limită Limit Deviations		
16.1	18.6	+0.05 -0.20	1.25	±0.15	15	2	20.5	30	+2 -0	0.54	2.0
17.9	20.4		1.25		15		23.0	30		0.59	2.5
20.0	22.5	+0.05	1.25		18		25.0	36		0.66	3.0
25.5	28.3	-0.25	1.40	±0.20	20	3	34.0	40	+3 -0	0.93	5.0
34.2	37.0	+0.10 -0.30	1.40		22		41.0	44		1.23	9.5
44.0	47.0		1.40		27		51.0	54		1.68	13.0

Scanned with OKEN Scanner

Lungimi de livrare / Delivery Length	3 m

Filetul tubului şi manşonului Tube and Muff Thread	STAS 549-68

Protecţia tuburilor şi a manşonului / Pipe and Muff Protection	
Lacul de protecţie / Protection Varnish	Citom-STAS 6800-63
Suprafaţa acoperită / Covered Surface	Interior şi exterior Inside and Outside
Grosimea peliculei / Film Thickness	25 μm
Rezistenţa la încălzire a peliculei Heat strength of the film	min. 50^{0}C

Abateri limită / Limit Deviations	
Lungime / Length	± 100 mm
Masa pentru fiecare tub Weight for each pipe	± 10 %
Rectilinitatea / Rectilinearity	Săgeată / sag - max. 1.5 mm/m

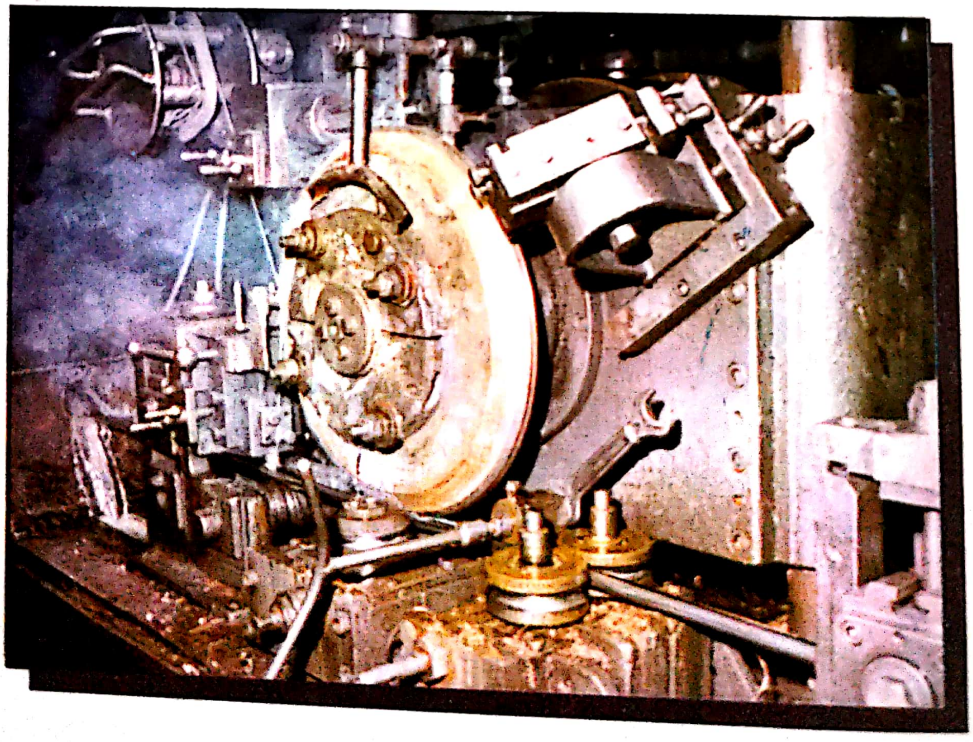

Scanned with OKEN Scanner

Ţevi pătrate şi dreptunghiulare din oţel sudate longitudinal

Squares and Rectangulars Longitudinally Welded Steel Tubes

Norme de fabricaţie Standard	STAS 7941-90 DIN 2395-81

Material	Norma de fabricaţie/Standards
OL 32; OL 37	STAS 500/2-80
B2	STAS 9724-90
USt 12	DIN 1623/1-72
USt 37-2; RSt 37-2	DIN 17100-80

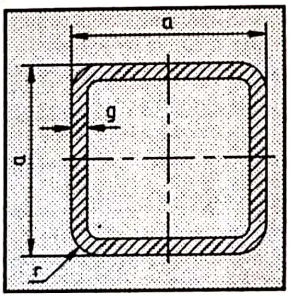

Ţevi pătrate

Square Tubes

Dimensiuni şi mase / Dimensions and Weights					
Dimensiuni/Dimensions a[mm]	Grosimi de perete / Wall thickness g [mm]				
	1.25	1.5	2.0	2.5	3
	Masa liniară / Weight [kg/m]				
20	0.82	0.87	1.13		
25	1.02	1.11	1.44		
30	1.21	1.34	1.76	2.16	
40		1.81	2.39	2.94	3.48
50		2.28	3.01	3.73	4.43
60		2.76	3.61	4.50	5.37

Scanned with OKEN Scanner

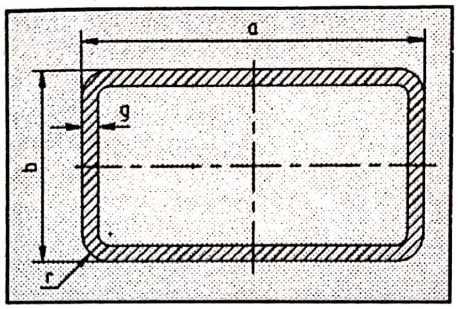

Ţevi dreptunghiulare

Rectangulars Tubes

Dimensiuni şi mase / Dimensions and Weights						
Dimensiuni Dimensions		Grosimi de perete Wall Thickness g [mm]				
a [mm]	b [mm]	1.25	1.50	2.00	2.50	3.00
		Masa liniară / Weight [kg/m]				
30	10	0.82	0.87	1.13		
	15	0.92	0.99	1.29		
	20	1.02	1.11	1.44		
35	25		1.34	1.76	2.16	
40	20		1.34	1.76	2.16	
	30		1.58	2.07	2.55	
50	30		1.81	2.39	2.94	3.49
	40		2.05	2.70	3.33	3.96
60	30			2.70	3.33	3.96
	40			3.01	3.73	4.43
70	40			3.33	4.12	4.89

Lungimea de livrare / Delivery Length	
Lungimi de fabricatie Fabrication Length	3 - 9 m
Lungimi fixe Fixed Length Lungimi multiple ale lungimilor fixe Multiple Length of the Fixed Length	În limitele lungimii de fabricatie In the limit of the manufacturing length

Scanned with OKEN Scanner

Abateri limită / Limit Deviation	
Lungimea / Length : - lungimi fixe / fixed length - lungimi totale ale lungimilor multiple total length of the multiple lengths	+ 100 mm 0 Prin acord se pot stabili alte abateri By mutual agreement for other deviations
Grosimea peretelui / Wall Thickness	± 12.5 %
Laturi / Sides : ≤ 30 mm 30 - 50 mm > 50 mm	 ± 0.3 mm ± 0.4 mm ± 0.8 %
Masa / Weight : - pe fiecare ţeavă / on each length - pe lot de ţevi vagonabil cu masa de minimum 10 t / on waggonable lot of tubes of min. 10 t	± 10 % ± 7.5 %
Rectilinitatea laturilor secţiunii Rectilinearity of the section side ≤ 40 mm 40 - 60 mm > 60 mm	 max. 0.50 mm max. 0.75 mm max. 1.00 mm
Rectilinitatea / Reactilinearity	max. 2 mm/m
Valorile max. admisibile pt. razele de racordare exterioare în funcţie de rezistenţa la tracţiune Max. admissible values for the connection ray depending on the tensile strength: - ≤ 390 [N/mm²] - > 390 - 400 [N/mm²]	 2 g 3 g
Torsionarea funcţie de dimensiunile laturii ţevii / Torsion depending on the tube side: - ≤ 50 mm - > 50 mm	răsucire totală / total torsion max. 10° /8 m 1° 50'/ m 1° / m

Scanned with OKEN Scanner

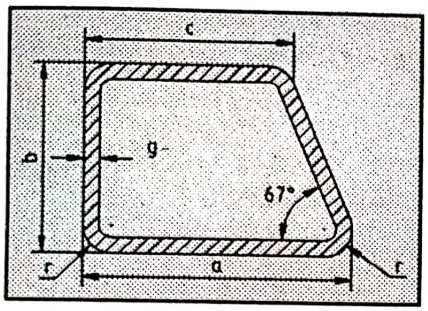

Ţevi trapezoidale din oţel sudate longitudinal

Trapezoidal Longitudinally Welded Steel Tubes

Norme de fabricaţie Standards	STR-MIM 307-87

Material	Norma de fabricaţie Standard
B2	STAS 9724-90

Dimensiuni şi mase / Dimensions and Weights					
Dimensiuni / Dimensions [mm]				Secţiunea Section [cm²]	Masa Weight [kg/m]
a	b	c	g		
40	35	25	1.25	1.69	1.33
			1.50	2.01	1.58

Lungimea de livrare / Delivery Length	
Lungimi de fabricaţie Fabrication Length	4...8 m
Lungimi fixe / Fixed Lengths Lungimi multiple / Multiple Lengths	În limitele lungimilor de fabricaţie In the limit of the manufacturing lengths

Scanned with OKEN Scanner

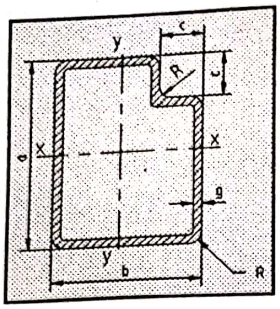

Ţevi pătrate şi dreptunghiulare cu jgheab din oţel sudate longitudinal

Square and Rectangular Longitudinally Welded Steel Tubes With Groove

Normă de fabricaţie Standard	STR-MIM 140-87

Material	Norme de fabricaţie Standards
B2	STAS 9724-90
A3K	STAS 9485-80

Dimensiuni şi mase / Dimensions and Weights					
Dimensiuni / Dimensions [mm]				Secţiunea Section [cm²]	Masa Weight [kg/m]
a	b	c	g		
50	50	15	1.5	2.91	2.28
			2.0	3.84	3.01
45	35	13	1.5	2.31	1.81
			2.0	3.04	2.39
50	40	15	1.5	2.61	2.05
			2.0	3.44	2.70

Lungimea de livrare / Delivery Length	
Lungimi de fabricaţie Fabrication Lengths	4...8 m
Lungimi multiple Multiple Lengths	În limitele lungimilor de fabricaţie In the limit of the manufacturing length

Scanned with OKEN Scanner

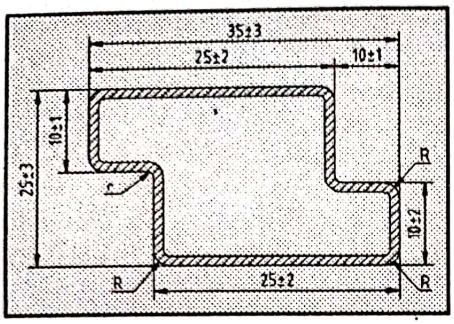

Ţevi dreptunghiulare cu dublu jgheab din oţel sudate longitudinal

Rectangular Longitudinally Welded Steel Tubes With Double Groove

Normă de fabricaţie Standard	STR-MIM 512-90

Material	Normă de fabricaţie Standard
B2n	STAS 9724-90

Dimensiuni şi mase / Dimensions and Weights				
Dimensiuni / Dimensions		Grosimea de perete Wall Thickness [mm]	Secţiunea Section [cm²]	Masa liniară Weight [kg/m]
ţevii / tube [mm]	jgheab / groove [mm]			
32 x 25	15 x 10	1.5	1.71	1.342

Lungimi de livrare / Delivery Legths	
Lungimi fixe / Fixed lengths	6000 mm

Scanned with OKEN Scanner

Abateri limită / Limit deviations			
Tip Type	Ţeavă trapezoidală Trapezoidal Tube	Ţeavă cu jgheab Tube with groove	Ţeavă cu dublu jgheab Tube with double groove
Lungimea / Length	+ 200 mm 0		
Dimensiunea laturilor Side Dimension	+ 0.5 mm - 1.5	± 1 mm	Trecute pe desen In the drawing
Grosimea peretelui Wall Thickness	± 12.5 %		
Raza de racordare Connection radius	max. 3g	max. 2.5g	R = max. 3.5 mm r = max. 6 mm
Rectilinitatea Rectilinearity	longitudinal 2 mm / m		transversal 1.5 mm / m
Torsionarea ţevii Tube Torsion	2° / m	1° 30' / m max 10° / 8m	1° 30' / m
Unghiuri / Angles	± 2°	± 3°	
Masa / Weight: - pe ficare ţeavă on each length - pe lot vagonabil on the carload lot of min. 10 t	± 10 % ± 7.5 %		

Scanned with OKEN Scanner

Ţevi ovale plate, semiovale şi eliptice din oţel sudate longitudinal
Oval flat, Semioval and Elliptical Longitudinally Welded Tubes

Norme de fabricaţie Standards	STAS 11685-84

Material	Norme de fabricaţie Standards
B2	STAS 9724-90

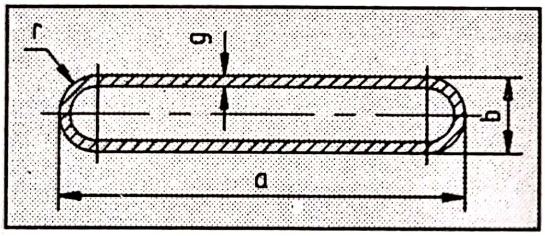

Ţeavă ovală plată
Oval Flat Tube

Dimensiuni şi mase / Dimensions and Weights					
Dimensiuni / Dimensions [mm]				Secţiunea Section [cm²]	Masa Weight [kg/m]
a	b	g	r		
25	9	1.00	4.5	0.57	0.45
36	14	2.00	7.0	1.63	1.28
40	10	1.50	5.0	1.30	1.02
40	10	2.00	5.0	1.71	1.34
52	26	1.50	13.0	1.93	1.52
52	26	2.00	13.0	2.55	2.00
65	9	1.00	4.5	1.37	1.08
65	9	1.25	4.5	1.71	1.34
65	10	1.50	5.0	2.05	1.61
75	12	1.50	6.0	2.38	1.87
75	12	2.00	6.0	3.15	2.47

Scanned with OKEN Scanner

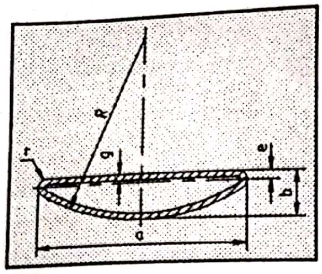

Ţevi semiovale
Semioval Tube

Dimensiuni şi mase / Dimensions and Weights							
Dimensiuni / Dimensions [mm]					Secţiunea Section [cm²]	Masa Weight [kg/m]	Distanţa Distance e [cm]
a	b	g	r	R			
40	12	1.0	3	30	0.87	0.68	0.52
40	12	1.5	3	30	1.28	1.00	0.52

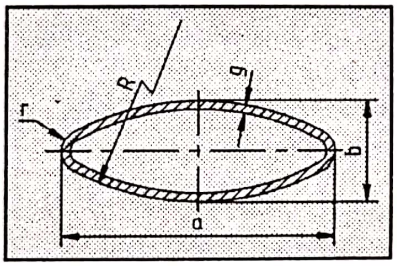

Ţevi eliptice
Elliptical Tubes

Dimensiuni şi mase / Dimensions and Weights						
Dimensiuni / Dimensions [mm]					Secţiunea Section [cm²]	Masa Weight [kg/m]
a	b	g	r	R		
74	18	1.5	5.2	140	2.35	1.84
74	18	2.0	5.2	140	3.10	2.43

Lungimea de livrare / Delivery Lengths	
Lungimi de fabricaţie / Fabrication Lengths	4...8 m
Lungimi fixe, lungimi multiple sau compuse ale lungimilor fixe Fixed lengths, multiple or compose lengths of the fixed lengths	În limitele lungimilor de fabricaţie In the limits of the manufacturing lengths

Scanned with OKEN Scanner

Abateri limită / Limit Deviations		
Lungimea / Length : - fixă / fixed - lungime totală, multiplă sau compusă / total, multiple or composed length	±100 mm	
Dimensiuni exterioare ale secţiunii transversale Outside Dimensions of the transversal section: ≤ 15 mm > 15....≤ 30 mm > 30....≤ 45 mm > 45....≤ 60 mm > 60 mm	 ± 1.00 mm ± 1.5 mm ± 1.7 mm ± 2.0 mm ± 2.5 mm	Pentru ţevi de transformatoare For the transformer tubes ± 0.4 mm ± 0.4 mm ± 0.5 mm ± 0.5 mm ± 1.0 mm
Grosimea peretelui Wall Thickness	± 12.5 %	
Formă, raze exterioare şi rectilinitatea laturilor Shape, outside radius and sides rectilinearity	Vor fi cuprinse în limitele abaterilor admise la dimensiunile exterioare ale secţiunii transversale It will be comprised in the admissible deviation to the outside dimensions of the transversal section	
Rectilinitatea ţevii Tube Rectilinearity	max. 1.5 mm/m	
Răsucirea în jurul axei longitudinale Torsion around longitudinal axis	1°30'/m	
Masă / Weight: - pe fiecare ţeavă în parte on each length - pe lot vagonabil on carload lot	 ± 10 % ± 7.5 %	

Scanned with OKEN Scanner

Ţevi de precizie speciale din oţel sudate longitudinal, trase sau laminate la rece

Cold Drawn or Cold Rolled Precision Longitudinally Welded Steel Tubes

Norme de fabricaţie Standards	Domeniul de utilizare Field of Application
STR 459-88	Ţevi pentru biciclete şi motorete Tubes for bicycles and motor bicycles
STR 302-88	Ţevi pentru arbori cardanici Tubes for cardan shafts
STR 306-92	Ţevi pentru role transportoare Tubes for roller beds
CS-02-88	Ţevi pentru frigidere cu absorbţie Tubes for refrigerator with absorption
CS-06-87	Ţevi pentru OLTCIT Tubes for OLTCIT car
CS-12-84	Ţevi pentru construcţia de automobile, tractoare, maşini agricole, conducte hidraulice, frigidere Tubes for automobiles construction, tractors, agricultural machinery, hydraulic pipes, refrigerators
CS-20-83	Ţevi pentru amortizoare Tubes for dampers
CS-22-83	Ţevi de eşapamente Exhaust pipes
CS-35-90	Ţevi pentru autovehicole neprotejate sau protejate prin zincare electrochimică Tubes for motor vehicles protected and unprotected through electro-chemical zincing
CS-52-92	Ţevi pentru chei bujii Tubes for sparking plugs keys
CT-20-83	Ţevi pentru radiatoare Tubes for radiators
CT-24-84	Ţevi pentru cilindru rezervor a amortizorului hidraulic Tubes for tank cylinder of the hydraulic damper
CT-39-87	Ţevi pentru aeroterme Tubes for aerothermics
CT-49-88	Ţevi pentru tubul rezervor al amortizorului telescopic Tubes for tank pipe of the telescopic damper
CT-45-89	Ţevi pentru pompe de ungere Tubes for oilers

Scanned with OKEN Scanner

Mod de execuţie Execution mode	TR	Trase la rece Cold Drawn
	LR	Laminate la rece Cold Rolled

Stare de livrare / State of Delivery	
AST	Alb trasă semitare / White semi-hard drawn
AT	Alb trasă tare / White hard drawn
R	Recopt / Reheat
N	Normalizată / Normalized
ZNE	Electrozincată în exterior / Electrochemically zinc plated

Material	Normă de fabricaţie / Standard
A_3K-St14	STAS 9485/80 - DIN 1633/92
B_2	STAS 9724/80
OLC 20	STAS 880/88
OL 37 USt 37-1; RSt 37-1; USt 37-2; RSt 37-2	STAS 500/2-80 DIN 17100/80

Dimensiuni şi mase

Ţevi pentru biciclete şi motorete / Tubes for bicycles and motor bicycles

Diametrul exterior Outside Diameter [mm]	Grosimea peretelui / Wall Thickness [mm]				
	1.0	1.25	1.5	2.0	2.5
	Masă liniară / Weight [kg/m]				
10	0.222	0.260			
12	0.271	0.322	0.388		
14	0.321	0.382	0.462		
15	0.350	0.412	0.499		
16	0.370	0.442	0.536	0.691	
18	0.419	0.502	0.610	0.789	
20	0.469	0.562	0.684	0.888	
22	0.518	0.622	0.758	0.986	
24	0.567	0.682	0.832	1.090	
25	0.592	0.712	0.869	1.130	
26	0.617	0.742	0.910	1.180	
28	0.686	0.802	0.980	1.280	1.570
30	0.715	0.862	1.050	1.380	1.690
32	0.765	0.922	1.130	1.480	1.820
36			1.280	1.680	2.070
38			1.350	1.780	2.190
40			1.420	1.870	2.310
42			1.500	1.970	2.440

Scanned with OKEN Scanner

Ţevi pentru arbori cardanici / Tubes for cardan shafts

Diametrul exterior Outside Diameter [mm]	Grosimea peretelui / Wall Thickness [mm]				
	2.0	2.5	3.0	4.0	5
	Masa liniara / Weight [kg/m]				
50		2.93			
57	2.71				
70			4.96		
73				6.81	
75.6		4.51			
90			6.44		
90				8.48	
100					11.71
102.6				9.73	
102					11.96

Ţevi pentru role transportoare / Tubes for roller beds

Diametrul exterior Outside Diameter [mm]	Grosimea peretelui / Wall Thickness [mm]							
	2.9	3.2	3.6	4.0	4.5	5.0	5.6	6.3
	Masa liniară / Weight [kg/m]							
63.5	4.33	4.76	5.32					
88.9		6.76	7.57					
108		8.27	9.27	10.3				
133			11.5	12.7	14.3			
159					17.1	19.0	21.2	23.7

Scanned with OKEN Scanner

Ţevi pentru frigidere cu absorbţie / Tubes for refrigerator with absorption

Diametrul exterior Outside Diameter [mm]	Grosimea peretelui / Wall Thickness [mm]			
	1.0	1.5	2.0	2.5
	Masa liniară / Weight [kg/m]			
6	0.123	0.166		
7	0.148			
12	0.271			
14	0.321			
15	0.345			
16	0.370	0.536		
18	0.419	0.610		
20	0.469	0.684		
22	0.518	0.758		
23		0.795		
25	0.592	0.869		
26	0.617			
28	0.666	0.980	1.28	1.57
32	0.765	1.130	1.48	1.87
33		1.170		
35		1.240	1.68	2.00
40		1.420	1.87	2.31
65		2.350		

Ţevi pentru OLTCIT / Tubes for OLTCIT car

Diametrul exterior Outside Diameter [mm]	Grosimea peretelui / Wall Thickness [mm]					
	0.6	1.0	1.25	1.5	2.0	3.0
	Masa liniară / Weight [kg/m]					
10		0.222				
14		0.321				
16				0.536		
23				0.795		
25				0.869		
30		0.715				
31				1.090		
38			1.13		1.78	
40			1.19		1.87	
44					2.07	
45	0.657					
60						
72.5						4.22
			2.20			

Scanned with OKEN Scanner

Ţevi pentru construcţia de automobile, tractoare, maşini agricole, conducte hidraulice, frigidere
Tubes for automobiles construction, tractors, agricultural machinery, hydraulic pipes, refrigerators

Diametrul exterior Outside Diameter [mm]	Grosimea peretelui / Wall Thickness [mm]			
	0.5	0.55	0.75	0.8
	Masa liniară / Weight [kg/m]0			
3			0.0416	
3.10		0.0346		
4	0.043			0.063
4.76			0.0742	
5	0.056			0.083
6	0.068			0.103
8	0.092			0.142
10	0.117		0.1780	0.182

Ţevi pentru amortizoare / Tubes for dampers

Diametrul exterior Outside Diameter [mm]	Grosimea peretelui / Wall Thickness [mm]		
	1.5	2.0	2.5
	Masa liniară / Weight [kg/m]		
45		2.12	
51		2.42	
54	1.94		
57	2.03	2.71	
63.5	2.29	3.03	
70		3.35	4.16

Ţevi de eşapamente / Exhaust pipes

Diametrul exterior Outside Diameter [mm]	Grosimea peretelui / Wall Thickness [mm]	Masa liniară / Weight [kg/m]
40	1.25	1.19

Scanned with OKEN Scanner

Scanned with OKEN Scanner

Ţevi pentru autovehicole neprotejate sau protejate prin zincare electrochimică
Tubes for motor vehicles unprotected or electrochemical zinc plated

Diametrul exterior Outside Diameter [mm]	Grosimea peretelui / Wall Thickness [mm]			
	0.5	0.7	1.0	1.5
	Masa liniară / Weight [kg/m]			
4.75	0.052	0.070		
6.00	0.068	0.091	0.123	
8.00		0.126	0.173	
10.00		0.161	0.222	
12.00			0.271	0.388
15.00			0.345	0.499
16.00			0.370	0.536
18.00			0.419	0.610
22.00			0.518	0.758

Ţevi pentru chei bujii / Tubes for sparking plugs keys

Diametrul exterior Outside Diameter [mm]	Grosimea peretelui / Wall Thickness [mm]	Masa liniară / Weight [kg/m]
20	1.5	0.684
25	1.5	0.869

Ţevi pentru radiatoare / Tubes for radiators

Diametrul exterior Outside Diameter [mm]	Grosimea peretelui / Wall Thickness [mm]	
	1	1.5
	Masa liniară / Weight [kg/m]	
12	0.271	
35		1.24

Scanned with OKEN Scanner

Ţevi pentru cilindru rezervor a amortizorului hidraulic OLTCIT
Tubes for tank cylinder of the OLTCIT hydraulic damper

Diametrul exterior Outside Diameter [mm]	Grosimea peretelui / Wall Thickness [mm]	Masa liniară / Weight [kg/m]
39	1.5	1.387

Ţevi pentru aeroterme / Tubes for aerothermics

Diametrul exterior Outside Diameter [mm]	Grosimea peretelui / Wall Thickness [mm]	Masa liniară / Weight [kg/m]
16	1.0	0.370
16	1.5	0.455

Ţevi pentru tubul rezervor al amortizorului telescopic DACIA
Tubes for tank pipe of the DACIA telescopic damper

Diametrul exterior Outside Diameter [mm]	Grosimea peretelui / Wall Thickness [mm]	Masa liniară / Weight [kg/m]
51	1.5	1.83

Ţevi pentru pompe de ungere / Tubes for oilers

Diametrul exterior Outside Diameter [mm]	Grosimea peretelui / Wall Thickness [mm]	Masa liniară / Weight [kg/m]
42	1.5	1.50
50	1.5	1.79

Scanned with OKEN Scanner

PROFILE

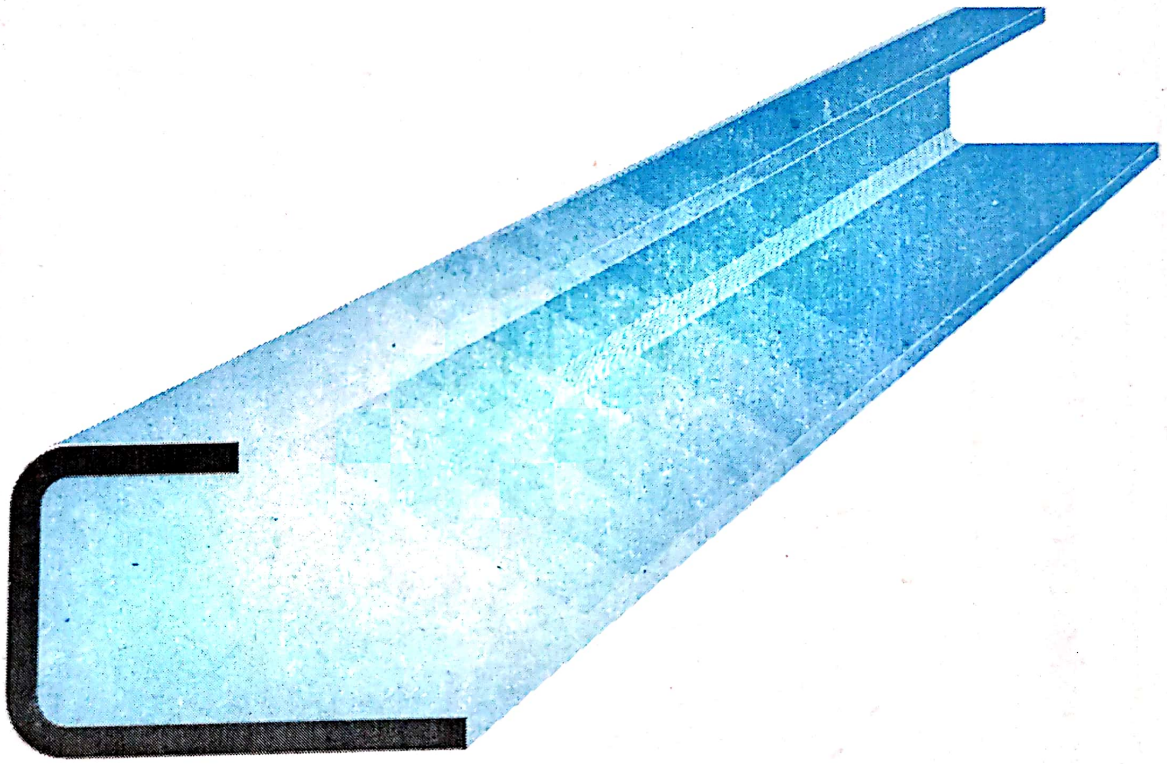

PROFILES

Scanned with OKEN Scanner

Traseul tehnologic / Technological Line

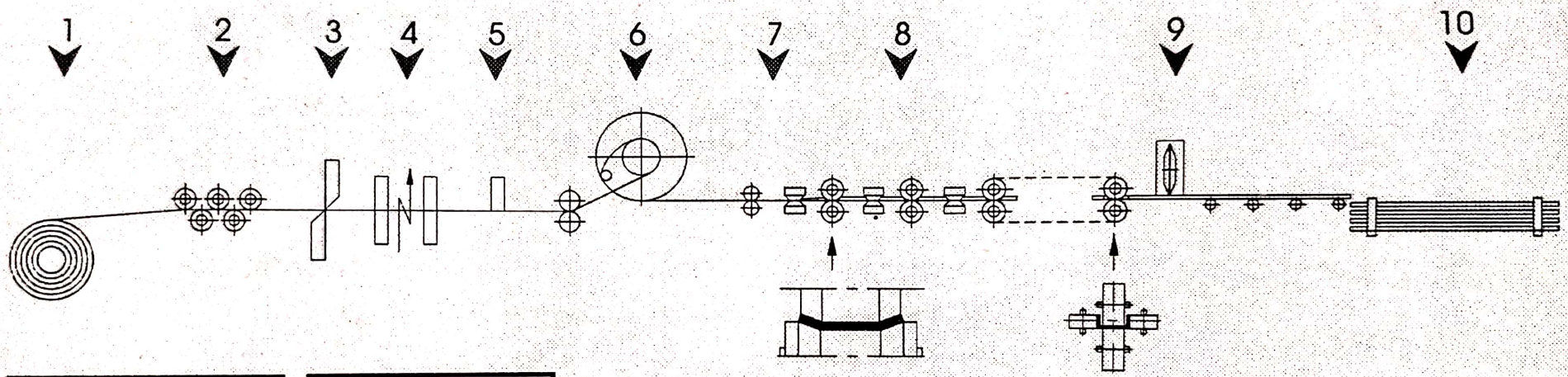

Legenda

1. Desfasurator
2. Masina de indreptat
3. Foarfeca ghilotina
4. Masina de sudat cap la cap
5. Debavurator
6. Acumulator
7. Role de tractiune
8. Masina de formare
9. Ferastrau culisant
10. Pat de colectare

Legend

1. Uncoiling
2. Levelling
3. End Shearing
4. End Splicing and Automatic s.a. Welding
5. Bead Removal
6. Strip Accumulating
7. Levelling
8. Forming Machine
9. Flying Saw
10. Colecting Bed

Scanned with OKEN Scanner

CONDIŢII GENERALE DE FABRICAŢIE

Condiţiile generale de calitate, caracteristicile şi abaterile limită ale profilelor din prezentul catalog sînt conform STAS 8426-82. Profilele se livrează la următoarele lungimi:

- De fabricaţie: 3...10 m. Se admit pînă la 6% din cantitatea livrată lungimi mai mici dar nu sub 1.5 m.

- Fixe (sau multiple): în gama lungimilor de fabricaţie cu o toleranţă de 0 + 80 mm.

- Greutăţile pe metru liniar ale profilelor ce figurează în catalog sînt greutăţi teoretice ele putînd varia în plus sau minus în funcţie de toleranţele la grosimea benzilor din care sînt fabricate profilele.

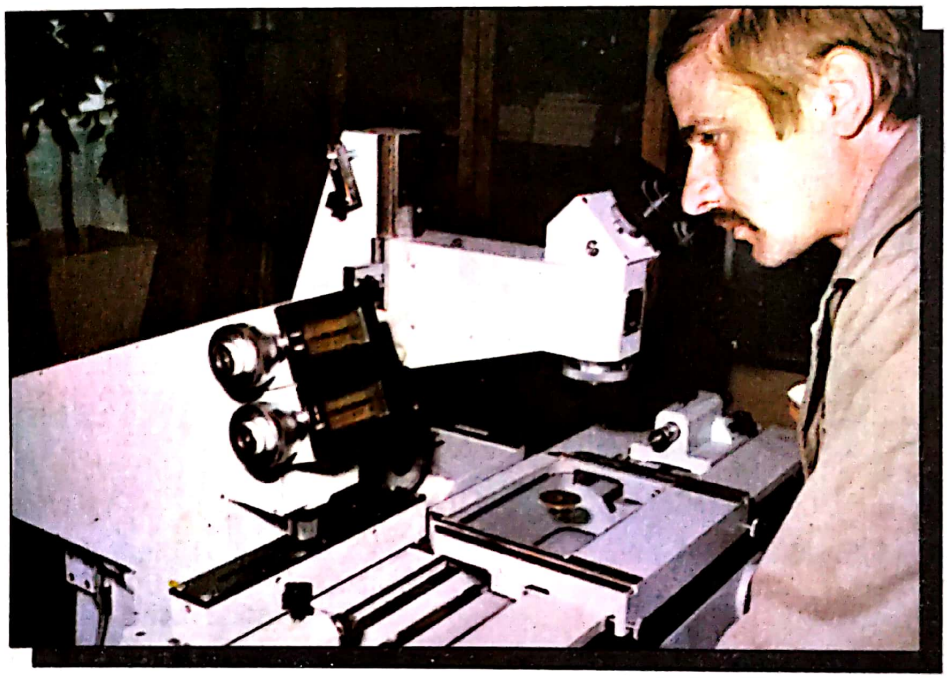

GENERAL CONDITIONS OF FABRICATON

The general conditions of quality, the characteristics and the limit deviation of the profiles in this catalogue are according to STAS 8426-82. The profiles are delivered according the following lengths:

- of fabrication : 3...10 m. Shorter lengths are allowed up to 6% of the supplied quantity, but not less than 1.5 m.

- fixed (or multiple): within the range of the manufacturing lengths with a tolerance of 0 + 80 mm.

- the unitary weigths of the profiles contained in this catalogue are theoretical weigth which can alternate plus or minus, depending on the strips thickness tolerance.

Scanned with OKEN Scanner

Abateri limită la dimensiuni exterioare

Abaterile limită la dimensiunile exterioare ale profilelor dacă în comandă nu se prevede altfel trebuie să fie după cum urmează:

Outside Dimensions Limit Deviations

The outside dimensions limit deviations of the profiles must be the following unless is otherwise specified:

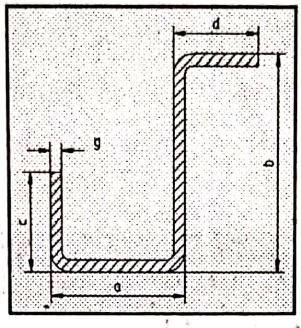

Grosimea Thickness g	Latură mărginită de două îndoituri Two Folds Bordered Side (a,b)			Latură liberă mărginită de o îndoitură One Fold Bordered Free Side (c;d)		
	≤ 50	> 50...100	> 100...220	≤ 40	> 40...80	> 80...120
> 0.5 ≤ 3	± 0.75	± 1.00	± 1.00	± 1.20	± 1.50	± 1.50
> 3 ≤ 5	± 1.00	± 1.00	± 1.25	± 1.50	± 1.50	± 2.00

Abateri limită la razele interioare

Abaterile limită la razele interioare de îndoire pentru unghiul de 90° nu vor depăşi valoarea de ± 20 %.

Valorile nominale ale razelor interioare de îndoire pentru unghiul de 90° trebuie să fie:

Inside Radius Limit Deviation

Fold inside radius limit deviations for the right angles will not exceed ± 20%.

The nominal values of the inside fold radius for the right angle must be:

Rezistenţa la rupere Tensile Strength R_m [N/mm²]	Grosimea peretelui / Wall Thickness g [mm]	
	g ≤ 4	g > 4...8
	Raza interioară / Inside Radius	
< 390	1 g	1.5 g
> 390...490	1.5 g	2 g
> 490	2 g	2.5 g

Scanned with OKEN Scanner

Abateri limită la grosimi
Thickness Limit Deviations

Bandă laminată la cald Hot Rolled Strip STAS 908-90 STAS 9236-80		Bandă laminată la rece Cold Rolled Strip STAS 9150-80	
Grosimea nominală Nominal Thickness [mm]	Abateri limită Limit Deviations [mm]	Grosimea nominală Nominal Thickness [mm]	Abateri limită Limit Deviations [mm]
> 2...3.0 > 3.0...4.0 > 4.0...5.0	± 0.20 ± 0.25 ± 0.27	0.50 0.60 0.80 1.00 1.25 1.50 1.75 2.00 2.25 2.50 3.00	± 0.08 ± 0.08 ± 0.09 ± 0.10 ± 0.12 ± 0.14 ± 0.15 ± 0.16 ± 0.18 ± 0.18 ± 0.20

Abateri limită la unghiuri
Angles Limit Deviation

Dimensiunea laturii mici a profilului Small Side Dimension of the Profile [mm]	≤ 10	> 10...40	> 40...80	> 80
Abateri limită de la unghiurile drepte Limit Deviation from the Right Angles	± 3°	± 2°	± 1° 30'	± 1°

Scanned with OKEN Scanner

Abateri limită la rectilinitate

Se admit curburi locale cu săgeata de max. 1 mm/m.

Săgeata curburii pe lungimea totală a profilului nu trebuie să depăşească produsul dintre săgeata curburii locale şi lungimea profilului în metri.

Rectilinearity Limit Deviations

Local curves with an deflection of max. 1 mm/m are allowed. The deflection of the curve on the total length of the profile should not exceed the product of the local deflection curve by the profile length in meters.

Abateri limită la răsucire

Răsucirea în jurul axei longitudinale pe orice porţiune din lungimea profilului nu trebuie să depăşească un grad pe metru liniar.

Răsucirea totala a profilului nu trebuie să depăşească produsul dintre răsucirea pe metru liniar şi lungimea profilului în metri.

Torsion Limit Deviation

Torsion around the longitudinal axis on any portion of the profile length should not exceed one degree per meter.

The total torsion of the profile should not exceed the product of the torsion per meter with the profile length.

Control

Controlul dimensiunilor şi unghiurilor se face la o distanţă mai mare de 250 mm de capetele profilului pentru a se evita deformaţiile rezultate de la tăiere.

Inspection

The inspection of the dimensions and of the angles is made at more than 250 mm from the profile edges

Scanned with OKEN Scanner

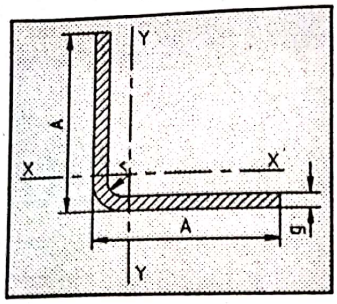

PROFILE CORNIER CU ARIPI EGALE
L PROFILES WITH EQUAL WINGS

STAS 7836/1-80

Dimensiuni Dimensions [mm]			Masa Weight	Mărimi statice Static Magnitudes x-x = y-y	
A	g	r	[kg/m]	Ix [cm⁴]	Wx [cm³]
18	1.5	2	0.39	0.16	0.12
20	1.5	2	0.44	0.22	0.15
20	2.0	3	0.57	0.29	0.20
20	2.5	3	0.70	0.35	0.25
25	2.0	3	0.73	0.57	0.32
25	2.5	3	0.90	0.69	0.40
25	3.0	4	1.05	0.82	0.47
28	2.0	3	0.82	0.81	0.41
28	2.5	3	1.01	0.99	0.50
28	3.0	4	1.19	1.16	0.60
30	2.0	3	0.88	1.01	0.47
30	2.5	3	1.09	1.23	0.58
30	3.0	4	1.29	1.44	0.69
32	2.0	3	0.95	1.23	0.53
32	2.5	3	1.17	1.50	0.66
32	3.0	4	1.38	1.76	0.78
35	2.0	3	1.04	1.82	0.73
35	2.5	3	1.29	1.98	0.79
35	3.0	4	1.52	2.64	1.00
36	2.0	3	1.07	1.77	0.68
36	2.5	3	1.33	2.16	0.84
36	3.0	4	1.57	2.55	1.00
40	2.0	3	1.20	2.45	0.84
40	2.5	3	1.49	3.00	1.04
40	3.0	4	1.76	3.53	1.24
40	4.0	6	2.28	4.58	1.63
40	5.0	7	2.78	5.59	2.03
45	2.0	3	1.35	3.51	1.07
45	2.5	3	1.68	4.32	1.33
45	3.0	4	1.99	5.09	1.58

Dimensiuni Dimensions [mm]			Masa Weight	Mărimi statice Static Magnitudes x-x = y-y	
A	g	r	[kg/m]	Ix [cm⁴]	Wx [cm³]
45	4.0	6	2.59	6.59	2.08
45	5.0	7	3.18	8.04	2.57
50	2.5	3	1.88	5.98	1.65
50	3.0	4	2.23	7.06	1.96
50	4.0	6	2.91	9.14	2.57
50	5.0	7	3.57	11.15	3.18
55	3.0	4	2.46	9.48	2.38
55	4.0	6	3.22	12.29	3.13
55	5.0	7	3.96	14.99	3.86
60	3.0	4	2.70	12.39	2.84
60	4.0	6	3.53	16.09	3.74
60	5.0	7	4.35	19.65	4.62
63	3.0	4	2.84	14.40	3.14
63	4.0	6	3.72	18.72	4.13
63	5.0	7	4.59	22.87	5.10
65	3.0	4	2.94	15.86	3.35
65	4.0	6	3.85	20.62	4.41
65	5.0	7	4.75	25.20	5.44
70	3.0	4	3.17	19.91	3.90
70	4.0	6	4.16	25.92	5.13
70	5.0	7	5.14	31.72	6.34
80	3.0	4	3.64	29.99	5.12
80	4.0	6	4.79	39.14	6.74
80	5.0	7	5.92	47.99	8.33
90	3.0	4	4.11	43.01	6.51
90	4.0	6	5.42	56.24	8.58
90	5.0	7	6.71	69.07	10.61
100	4.0	6	6.05	77.72	10.64
100	5.0	7	7.49	95.59	13.17
120	5.0	7	9.06	167.48	19.12

Scanned with OKEN Scanner

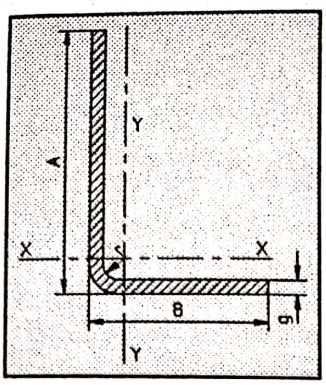

PROFILE CORNIER CU ARIPI INEGALE

L PROFILES WITH UNEQUAL WINGS

STAS 8250-80

Dimensiuni Dimensions [mm]				Masa Weight	Mărimi statice Static Magnitudes			
					x-x		y-y	
A	B	g	r	[kg/m]	Ix [cm⁴]	Wx [cm³]	Iy [cm⁴]	Wy [cm³]
22	20	1.5	2	0.46	0.29	0.18	0.23	0.16
22	20	2.0	3	0.60	0.36	0.24	0.29	0.20
30	20	2.0	3	0.73	0.86	0.43	0.32	0.21
30	20	2.5	3	0.90	1.04	0.53	0.38	0.26
30	20	3.0	4	1.05	1.20	0.62	0.44	0.30
32	20	2.0	3	0.76	1.03	0.49	0.32	0.21
32	20	2.5	3	0.94	1.25	0.60	0.39	0.26
32	20	3.0	4	1.10	1.44	0.70	0.45	0.30
40	20	2.0	3	0.88	1.90	0.74	0.34	0.22
40	20	2.5	3	1.09	2.32	0.92	0.41	0.27
40	25	2.0	3	0.96	2.06	0.78	0.65	0.34
40	25	2.5	3	1.19	2.52	0.96	0.79	0.41
40	25	3.0	4	1.40	2.94	1.13	0.92	0.49
40	30	2.0	3	1.04	2.21	0.80	1.09	0.48
40	30	2.5	3	1.29	2.70	0.99	1.33	0.59
40	30	3.0	4	1.52	3.15	1.17	1.55	0.70
40	30	4.0	6	1.96	3.97	1.50	1.95	0.90
50	25	2.0	3	1.12	3.80	1.18	0.69	0.35
50	25	2.5	3	1.39	4.66	1.46	0.84	0.43
50	25	3.0	4	1.64	5.44	1.72	0.98	0.50
50	30	2.0	3	1.20	4.06	1.22	1.16	0.50
50	30	2.5	3	1.49	4.99	1.51	1.42	0.61
50	30	3.0	4	1.76	5.84	1.79	1.66	0.72
50	40	2.0	3	1.35	4.50	1.28	2.61	0.87
50	40	2.5	3	1.68	5.53	1.59	3.21	1.07
50	40	3.0	4	1.99	6.50	1.88	3.76	1.27
50	40	4.0	6	2.59	8.30	2.44	4.80	1.64

Scanned with OKEN Scanner

Dimensiuni Dimensions [mm]				Masa Weight	Mărimi statice Static Magnitudes			
					x-x		y-y	
A	B	g	r	[kg/m]	Ix [cm⁴]	Wx [cm³]	Iy [cm⁴]	Wy [cm³]
60	40	3	4	2.23	10.73	2.66	3.97	1.30
60	40	4	6	2.91	13.77	3.46	5.08	1.68
60	40	5	7	3.57	16.62	4.23	6.10	2.05
60	50	3	4	2.46	11.62	2.76	7.45	2.00
60	50	4	6	3.22	14.97	3.60	9.57	2.61
60	50	5	7	3.96	18.13	4.41	11.57	3.19
70	40	3	4	2.46	16.35	3.55	4.14	1.32
70	40	4	6	3.22	21.04	4.63	5.30	1.71
70	40	5	7	3.96	25.49	5.68	6.38	2.09
80	40	3	4	2.70	23.52	4.56	4.28	1.34
80	40	4	6	3.53	30.34	5.96	5.49	1.74
80	40	5	7	4.35	36.85	7.31	6.62	2.13
80	50	3	4	2.94	25.51	4.75	8.09	2.07
80	50	4	6	3.85	33.04	6.22	10.43	2.70
80	50	5	7	4.75	40.24	7.64	12.64	3.32
90	50	4	6	4.16	45.58	7.76	10.77	2.74
90	50	5	7	5.14	55.61	9.55	13.06	3.36
100	40	3	4	3.17	43.11	6.90	4.50	1.36
100	40	4	6	4.16	55.84	9.04	5.78	1.78
100	40	5	7	5.14	68.08	11.13	6.98	2.18
100	50	3	4	3.41	46.74	7.20	8.56	2.12
100	50	4	6	4.48	60.74	9.45	11.06	2.77
100	50	5	7	5.53	74.23	11.64	13.42	3.40
100	60	3	4	3.64	49.90	7.43	14.35	3.03
100	60	4	6	4.79	64.99	9.77	18.62	3.97
100	60	5	7	5.92	79.56	12.06	22.69	4.88
100	70	3	4	3.88	52.68	7.63	22.12	4.08
100	70	4	6	5.10	68.72	10.04	28.79	5.36
100	70	5	7	6.32	84.23	12.40	35.18	6.60
100	80	3	4	4.11	55.14	7.80	32.07	5.27
100	80	4	6	5.42	72.01	10.27	41.83	6.93
100	80	5	7	6.71	88.35	12.68	51.23	8.55
120	40	3	4	3.64	70.74	9.68	4.66	1.38
120	40	4	6	4.79	91.90	12.70	6.00	1.81
120	40	5	7	5.92	112.34	15.66	7.26	2.21
120	50	3	4	3.88	76.55	10.09	8.91	2.15
120	50	4	6	5.10	99.73	13.27	11.53	2.82
120	50	5	7	6.32	122.18	16.38	14.00	3.46
120	60	3	4	4.11	81.70	10.44	15.01	3.08
120	60	4	6	5.42	106.65	13.74	19.50	4.04
120	60	5	7	6.71	130.86	16.98	23.77	4.97

Scanned with OKEN Scanner

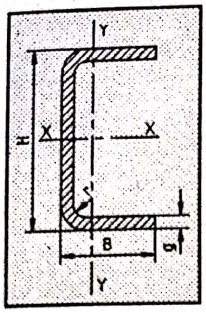

PROFIL "U" CU ARIPI EGALE

U PROFILES WITH EQUAL WINGS

STAS 7835/1-80

Dimensiuni Dimensions [mm]				Masa Weight	Mărimi statice Static Magnitudes			
					x-x		y-y	
H	B	g	r	[kg/m]	Ix cm^4	Wx cm^3	Iy cm^4	Wy cm^3
25	20	1.5	2	0.70	0.91	0.73	0.37	0.28
25	20	2.0	3	0.90	1.11	0.89	0.46	0.36
30	15	2.0	3	0.82	1.35	0.90	0.24	0.23
30	20	2.0	3	0.98	1.75	1.16	0.52	0.39
30	30	3.0	4	1.87	3.34	2.23	2.12	1.17
40	20	2.5	3	1.40	4.12	2.06	0.70	0.50
40	20	3.0	4	1.63	4.68	2.34	0.84	0.62
40	25	2.5	3	1.60	5.00	2.50	1.29	0.76
40	25	3.0	4	1.87	5.71	2.85	1.52	0.92
40	30	2.0	3	1.45	4.85	2.42	1.72	0.86
40	30	3.0	4	2.10	6.62	3.31	2.41	1.24
40	40	2.0	3	1.77	6.33	3.16	3.82	1.50
40	40	2.5	3	2.19	7.64	3.82	4.67	1.85
40	40	3.0	4	2.57	8.79	4.40	5.47	2.20
40	40	4.0	6	3.30	10.88	5.44	7.03	2.90
50	20	2.0	3	1.30	5.81	2.33	0.60	0.41
50	20	2.5	3	1.60	6.99	2.80	0.72	0.50
50	20	3.0	4	1.87	7.91	3.17	0.83	0.58
50	25	2.0	3	1.45	7.01	2.80	1.15	0.65
50	25	2.5	3	1.79	8.46	3.39	1.39	0.79
50	25	3.0	4	2.10	9.57	3.83	1.57	0.91
50	30	2.0	3	1.61	8.16	3.26	1.89	0.91
50	30	2.5	3	1.99	9.88	3.95	2.31	1.12
50	30	3.0	4	2.34	11.37	4.55	2.72	1.34
50	40	2.0	3	1.92	10.47	4.19	4.16	1.56
50	40	2.5	3	2.38	12.70	5.08	5.09	1.93
50	40	3.0	4	2.81	14.68	5.87	5.98	2.29
50	40	4.0	6	3.61	18.26	7.30	7.72	3.04

Scanned with OKEN Scanner

Dimensiuni Dimensions [mm]				Masa Weight	Mărimi statice Static Magnitudes			
					x-x		y-y	
H	B	g	r	[kg/m]	Ix [cm⁴]	Wx [cm³]	Iy [cm⁴]	Wy [cm³]
50	50	2.0	3	2.24	12.73	5.09	7.59	2.36
50	50	2.5	3	2.77	15.46	6.18	9.31	2.92
50	50	3.0	4	3.28	17.87	7.15	10.88	3.44
50	50	4.0	6	4.24	22.04	8.82	13.72	4.44
50	50	5.0	7	5.17	25.69	10.28	16.32	5.38
60	20	2.0	3	1.45	9.10	3.03	0.45	0.43
60	20	2.5	3	1.79	11.01	3.67	0.79	0.53
60	20	3.0	4	2.10	12.61	4.20	0.95	0.65
60	25	2.0	3	1.61	10.78	3.59	1.22	0.66
60	25	2.5	3	1.99	13.07	4.36	1.48	0.81
60	25	3.0	4	2.34	15.05	5.01	1.76	0.98
60	30	2.0	3	1.77	12.46	4.15	2.02	0.94
60	30	2.5	3	2.18	15.14	5.05	2.46	1.15
60	30	3.0	4	2.57	17.49	5.83	2.90	1.38
60	40	2.5	3	2.58	19.28	6.42	5.44	1.99
60	40	3.0	4	3.04	22.36	7.45	6.41	2.37
60	40	4.0	6	3.93	27.95	9.32	8.30	3.14
60	40	5.0	7	4.78	33.02	11.01	10.14	3.91
60	50	3.0	4	3.51	27.24	9.08	11.79	3.60
60	50	4.0	6	4.56	34.23	11.41	15.21	4.74
60	50	5.0	7	5.56	40.61	13.53	18.58	5.86
60	60	3.0	4	3.99	32.12	10.71	19.39	5.07
60	60	4.0	6	5.18	40.51	13.50	24.98	6.65
60	60	5.0	7	6.35	48.19	16.06	30.34	8.19
65	40	3.0	4	3.16	26.76	8.23	6.50	2.37
65	40	4.0	6	4.09	33.71	10.37	8.55	3.18
65	40	5.0	7	4.98	39.91	12.28	10.46	3.97
65	65	3.0	4	4.34	41.19	12.67	24.72	5.94
65	65	4.0	6	5.66	51.81	15.94	31.62	7.73
65	65	5.0	7	6.94	61.46	18.91	38.12	9.44
70	40	3.0	4	3.28	31.98	9.14	6.77	2.43
70	40	4.0	6	4.24	39.57	11.31	8.44	3.10
70	40	5.0	7	5.11	46.55	13.30	10.06	3.76
70	50	3.0	4	3.75	38.72	11.06	12.49	3.71
70	50	4.0	6	4.87	48.85	13.96	16.15	4.88
70	50	5.0	7	5.96	58.18	16.62	19.67	6.03
70	60	3.0	4	4.22	45.46	12.99	20.55	5.21
70	60	4.0	6	5.50	57.57	16.45	26.55	6.85
70	60	5.0	7	6.74	68.76	19.65	32.30	8.45

Scanned with OKEN Scanner

Dimensiuni Dimensions [mm]				Masa Weight	Mărimi statice Static Magnitudes			
					x-x		y-y	
H	B	g	r	[kg/m]	Ix [cm⁴]	Wx [cm³]	Iy [cm⁴]	Wy [cm³]
70	70	3.0	4	4.79	52.20	14.91	31.25	6.95
70	70	4.0	6	6.13	66.30	18.94	40.40	9.13
70	70	5.0	7	7.53	79.35	22.67	49.18	11.25
80	40	2.5	3	2.97	37.48	9.37	6.01	2.08
80	40	3.0	4	3.51	43.69	10.92	7.09	2.48
80	40	4.0	6	4.56	55.02	13.75	9.22	3.29
80	40	5.0	7	5.56	65.47	16.37	11.29	4.10
80	50	3.0	4	3.99	52.59	13.15	13.11	3.79
80	50	4.0	6	5.18	66.58	16.64	16.98	4.99
80	50	5.0	7	6.35	79.55	19.89	20.71	6.18
80	60	3.0	4	4.46	61.48	15.37	21.58	5.34
80	60	4.0	6	5.81	78.14	19.53	27.95	7.02
80	60	5.0	7	7.13	93.63	23.41	34.06	8.67
80	80	3.0	4	5.40	79.28	19.82	47.18	9.14
80	80	4.0	6	7.07	101.27	25.32	61.18	12.01
80	80	5.0	7	8.71	121.80	30.45	74.66	14.82
90	40	3.0	4	3.75	57.44	12.76	7.28	2.50
90	40	4.0	6	4.87	72.16	16.03	9.26	3.23
90	40	5.0	7	5.96	85.68	19.04	11.08	3.93
90	50	3.0	4	4.22	68.80	15.29	13.56	3.83
90	50	4.0	6	5.50	87.61	19.47	17.72	5.09
90	50	5.0	7	6.74	104.97	23.32	21.63	6.30
90	60	3.0	4	4.69	80.16	17.81	22.40	5.42
90	60	4.0	6	6.13	102.41	22.76	29.20	7.17
90	60	5.0	7	7.53	123.05	27.34	35.63	8.85
100	40	3.0	4	3.99	73.97	14.79	7.62	2.56
100	40	4.0	6	5.18	93.70	18.74	9.92	3.39
100	40	5.0	7	6.35	112.09	22.42	12.16	4.23
100	50	3.0	4	4.46	88.09	17.62	14.15	3.92
100	50	4.0	6	5.81	112.14	22.43	18.38	5.17
100	50	5.0	7	7.13	134.68	26.93	22.45	6.40
100	60	3.0	4	4.90	93.07	19.40	15.25	4.16
100	60	4.0	6	6.80	120.20	24.40	24.42	7.40
100	60	5.0	7	11.50	178.80	38.50	33.20	10.20
100	80	3.0	4	5.87	130.44	26.09	51.17	9.51
100	80	4.0	6	7.70	167.47	33.49	66.55	12.52
100	80	5.0	7	9.49	202.43	40.48	81.39	15.46
100	100	4.0	6	8.95	204.35	40.87	122.03	18.98
100	100	5.0	7	11.06	247.59	49.52	149.50	23.45

Scanned with OKEN Scanner

Dimensiuni Dimensions [mm]				Masa Weight	Mărimi statice Static Magnitudes			
					x-x		y-y	
H	B	g	r	[kg/m]	Ix [cm⁴]	Wx [cm³]	Iy [cm⁴]	Wy [cm³]
120	30	3	4	3.99	93.87	15.64	3.56	1.50
120	30	4	6	5.18	118.66	19.78	4.70	2.02
120	30	5	7	6.35	141.82	23.64	5.85	2.57
120	40	3	4	4.47	114.41	19.07	8.03	2.62
120	40	4	6	5.81	145.59	24.26	10.47	3.47
120	40	5	7	7.13	174.90	29.15	12.85	4.32
120	50	3	4	4.93	134.95	22.40	14.99	4.02
120	50	4	6	6.44	172.51	28.75	19.50	5.31
120	50	5	7	7.92	207.99	34.66	23.85	6.57
120	60	3	4	5.40	155.49	25.91	24.83	5.70
120	60	4	6	7.07	199.43	33.24	32.30	7.51
120	60	5	7	8.71	241.07	40.18	39.49	9.28
120	80	3	4	6.34	196.56	32.76	54.56	9.81
120	80	4	6	8.32	253.28	42.21	71.11	12.92
120	80	5	7	10.28	307.24	51.21	87.09	15.97
120	100	4	6	9.58	307.12	51.19	130.51	19.62
120	100	5	7	11.84	373.40	62.23	160.13	24.27
120	120	4	6	10.84	360.97	60.16	213.91	27.55
120	120	5	7	13.41	439.57	73.26	262.87	23.10
140	40	3	4	4.93	166.20	23.74	8.37	2.66
140	40	4	6	6.44	212.29	30.33	10.92	3.53
140	40	5	7	7.92	255.90	36.56	13.40	4.39
140	50	3	4	5.40	194.36	27.77	15.69	4.10
140	50	4	6	7.07	249.29	35.61	20.43	5.41
140	50	5	7	8.70	301.48	43.07	25.00	6.70
140	60	3	4	5.87	222.52	31.79	26.06	5.82
140	60	4	6	7.70	286.29	40.90	33.95	7.67
140	60	5	7	9.49	347.06	49.58	41.54	9.48
140	80	3	4	6.81	278.83	39.83	57.49	10.05
140	80	4	6	8.95	360.30	51.47	75.03	13.25
140	80	5	7	11.07	438.23	62.60	91.99	16.38
140	100	4	6	10.21	434.30	62.04	137.95	20.15
140	100	5	7	12.63	529.40	75.63	169.44	24.94
160	40	3	4	5.10	230.25	28.78	8.56	2.67
160	40	4	6	7.07	295.40	36.92	11.29	3.58
160	40	5	7	8.08	340.60	41.30	13.20	3.90
160	50	3	4	5.87	267.53	33.44	16.27	4.16
160	50	4	6	7.70	344.08	43.01	21.20	5.50
160	50	5	7	9.49	417.16	52.14	25.96	6.81

Scanned with OKEN Scanner

Dimensiuni Dimensions [mm]				Masa Weight	Mărimi statice Static Magnitudes			
					x-x		y-y	
H	B	g	r	[kg/m]	Ix [cm⁴]	Wx [cm³]	Iy [cm⁴]	Wy [cm³]
160	60	3	4	6.34	304.51	38.06	27.11	5.92
160	60	4	6	8.32	392.76	49.09	35.34	7.80
160	60	5	7	10.28	477.24	59.65	43.28	9.65
160	80	3	4	7.28	378.46	47.31	60.04	10.25
160	80	4	6	9.58	490.12	61.26	78.44	13.51
160	80	5	7	11.85	597.41	74.67	96.24	16.71
180	40	3	4	5.87	308.33	34.26	8.80	2.70
180	40	4	6	7.70	395.47	43.94	11.30	3.52
180	40	5	7	9.49	478.53	53.17	13.63	4.31
180	50	3	4	6.34	355.66	39.52	16.77	4.22
180	50	4	6	8.32	458.48	50.94	21.86	5.56
180	50	5	7	10.27	557.01	61.89	26.78	6.89
180	60	3	4	6.81	402.65	44.74	28.01	6.00
180	60	4	6	8.95	520.44	57.83	36.55	7.91
180	60	5	7	11.06	633.60	70.40	44.78	9.79
180	80	3	4	7.75	496.32	55.15	62.16	10.40
180	80	4	6	10.21	644.36	71.60	81.43	13.74
180	80	5	7	12.63	786.76	87.42	99.97	16.99
180	100	5	7	14.20	939.93	104.44	184.98	25.98
200	50	4	6	8.95	594.08	59.41	22.43	5.62
200	50	5	7	11.06	723.06	72.30	27.49	6.96
200	60	4	6	9.58	670.93	67.09	37.60	8.01
200	60	5	7	11.84	818.14	81.81	46.08	9.90

Scanned with OKEN Scanner

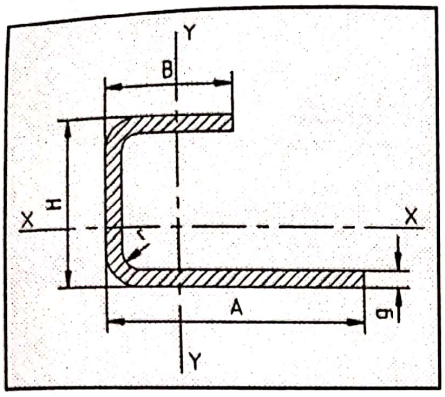

Profil U cu aripi neegale

U Profile With Unequal Wings

STAS 8610-80

Dimensiuni Dimensions [mm]					Masa Weight	Mărimi statice Static Magnitudes			
						x-x		y-y	
H	A	B	g	r	[kg/m]	Ix [cm⁴]	Wx [cm³]	Iy [cm⁴]	Wy [cm³]
40	40	20	2.0	3	1.45	4.53	1.88	2.94	0.96
50	40	25	2.5	3	2.09	10.22	3.61	4.18	1.20
50	40	25	3.0	4	2.46	11.70	4.12	5.14	1.47
50	50	25	3.0	4	2.69	12.81	4.25	8.62	2.26
60	50	25	3.0	4	2.93	19.77	5.53	9.21	2.49
80	50	25	3.0	4	3.40	39.36	8.43	10.15	2.75
80	80	40	3.0	4	4.46	57.54	11.95	34.55	5.69
80	80	50	4.0	6	6.13	80.66	17.59	49.43	6.83
100	50	25	3.0	4	3.87	67.55	11.77	10.86	2.83
100	80	40	3.0	4	4.93	96.60	16.30	37.22	6.36
100	80	50	4.0	6	6.76	135.25	23.86	53.74	7.67

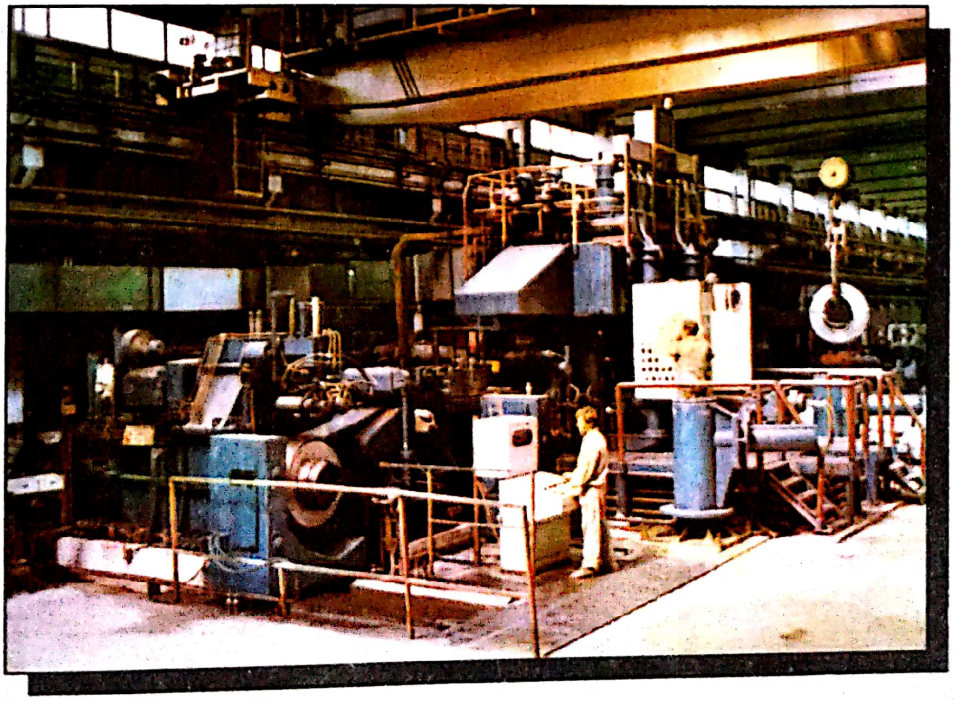

Scanned with OKEN Scanner

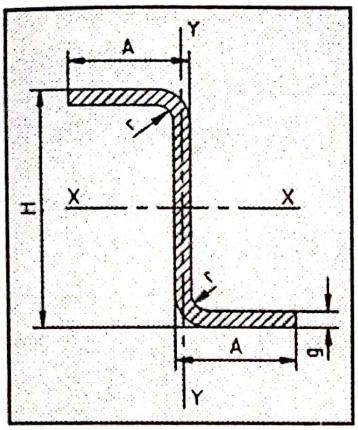

PROFIL Z CU ARIPI EGALE
Z PROFILE WITH EQUAL WINGS

STAS 8296-80

Dimensiuni Dimensions [mm]				Masa Weight	Mărimi statice Static Magnitudes			
					x-x		y-y	
H	A	g	r	[kg/m]	Ix [cm⁴]	Wx [cm³]	Iy [cm⁴]	Wy [cm³]
43	17	2	3	1.09	3.54	1.65	0.55	0.34
44	17	3	4	1.58	5.01	2.28	0.75	0.49
80	40	3	4	3.52	43.51	10.88	11.43	2.97
80	40	4	6	4.56	54.41	13.60	14.68	3.86
95	50	3	4	4.34	77.99	16.42	22.84	4.71
95	50	4	6	5.66	98.75	20.79	29.54	6.15
120	50	3	4	4.93	134.71	22.45	22.84	4.71
120	50	4	6	6.44	171.73	28.62	29.56	6.16

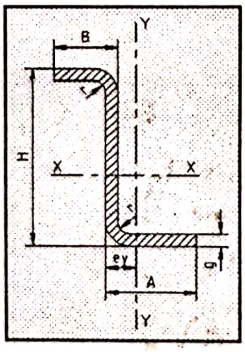

PROFIL Z CU ARIPI NEEGALE
Z PROFILE WITH UNEQUAL WINGS

STAS 8609-80

Dimensiuni Dimensions [mm]					Masa Weight	Mărimi statice Static Magnitudes			
						x-x		y-y	
H	A	B	g	r	[kg/m]	Ix [cm⁴]	Wx [cm³]	Iy [cm⁴]	Wy [cm³]
80	40	32	3.0	4	3.33	39.75	9.42	8.40	2.30
95	50	25	3.0	4	3.75	59.62	10.90	11.20	2.61
95	50	25	4.0	6	4.87	74.70	13.62	14.39	3.40
120	50	25	4.0	6	5.66	133.40	19.60	14.68	3.41

Scanned with OKEN Scanner

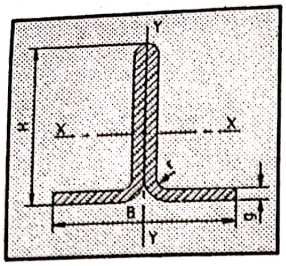

PROFIL T CU ARIPI EGALE
T PROFILE WITH EQUAL WINGS

STAS 8249-80

Dimensiuni Dimensions [mm]				Masa Weight	Mărimi statice Static Magnitudes			
					x-x		y-y	
H	B	g	r	[kg/m]	Ix [cm⁴]	Wx [cm³]	Iy [cm⁴]	Wy [cm³]
30	30	1.5	3	0.98	1.15	0.60	0.35	0.23
30	30	2.0	3	1.28	1.48	0.78	0.47	0.31
40	40	1.5	3	1.33	2.85	1.10	0.81	0.41
40	40	2.0	3	1.75	3.69	1.44	1.09	0.54

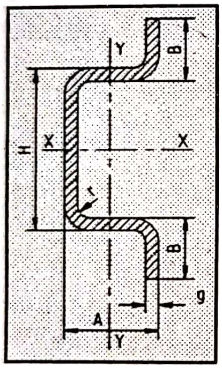

PROFIL OMEGA CU ARIPI EGALE
OMEGA PROFILE WITH EQUAL WINGS

STAS 8367-80

Dimensiuni [mm]					Masa	Mărimi statice / Static Magnitudes			
						x-x		y-y	
H	A	B	g	r	[kg/m]	Ix [cm⁴]	Wx [cm³]	Iy [cm⁴]	Wy [cm³]
30	15	16.5	1.5	2	0.97	3.38	1.13	0.46	0.60
34	10	13.5	1.5	2	0.83	2.93	1.01	0.17	0.31
40	20	16.0	2.0	3	1.52	8.84	2.33	0.82	1.03
40	25	15.0	2.0	3	1.65	7.62	2.31	1.95	1.43
40	25	15.0	2.5	3	2.02	9.04	2.78	2.28	1.68
40	25	15.0	3.0	4	2.32	16.32	3.84	1.02	1.24
50	20	16.0	2.0	3	1.68	11.27	2.89	1.31	1.14
50	20	20.0	2.0	3	1.81	13.96	3.25	1.51	1.40
50	20	20.0	2.5	3	2.21	16.71	3.93	1.75	1.63
55	55	32.5	5.0	7	7.60	167.32	21.59	16.57	8.22
90	20	20.0	2.5	3	3.00	53.95	8.63	2.23	1.73
95	20	20.0	2.0	3	2.51	50.07	7.64	1.95	1.49
95	20	20.0	2.5	3	3.09	60.59	9.32	2.27	1.74

Scanned with OKEN Scanner

PROFILE PENTRU TÎMPLĂRIE METALICĂ

PROFILES FOR METALLIC JOINERY

STAS 9142-80

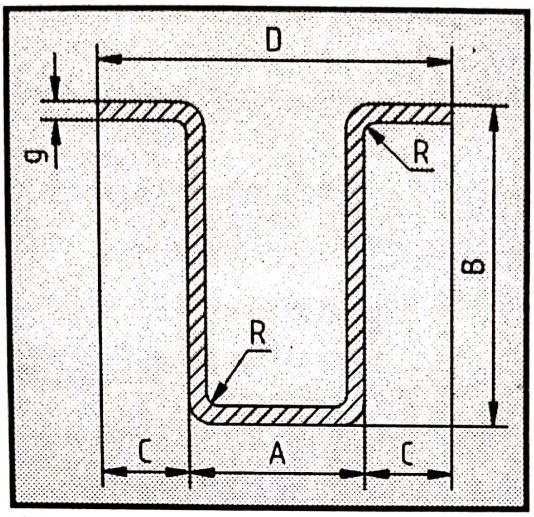

Profil Profile	A	B	C	D	R	g
TM 02	25	45	12	49	3	2
TM 12	75	45	14	103	3	2

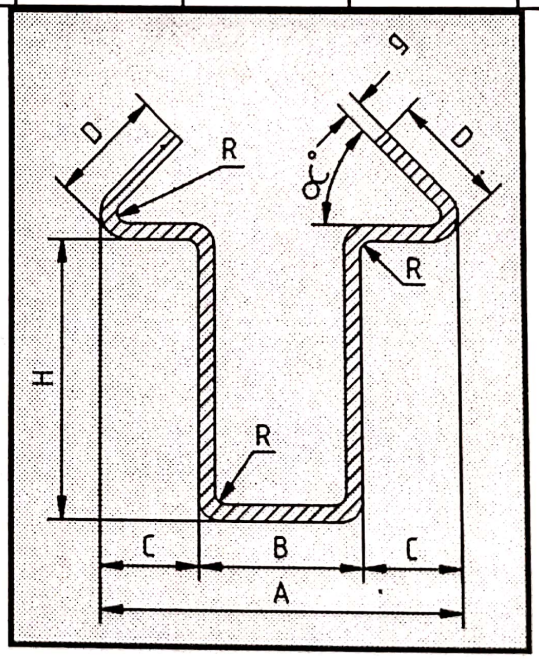

Profil Profile	A	B	C	D	R	α°	H	g
TM 04	55	25	15	13	3	45°	18	2
TM 05	55	25	15	13	3	45°	33	2
TM 06	55	25	15	13	3	45°	53	2
TM 16	55	25	15	13	3	45°	28	2

Scanned with OKEN Scanner

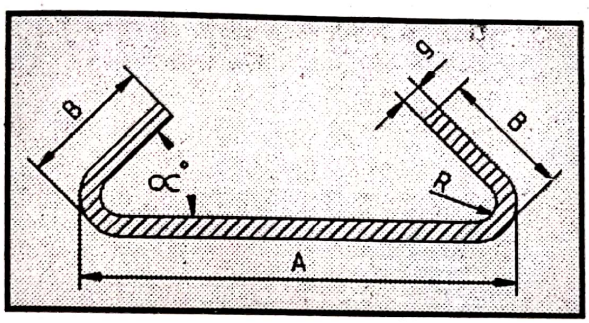

Profil Profile	A	B	R	α°	g
TM 03	55	13	3	45°	2
TM 13	105	13	3	45°	2

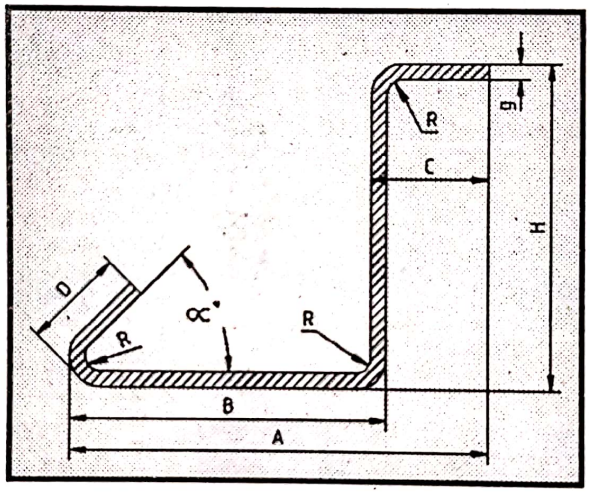

Profil Profile	A	B	C	D	R	H	α°	g
TM 14	52	40	14	13	3	45	45°	3
TM 15	102	90	14	13	3	45	45°	3

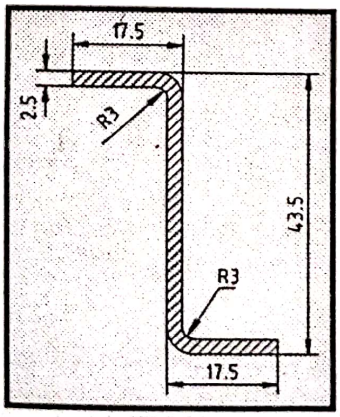

TM 11

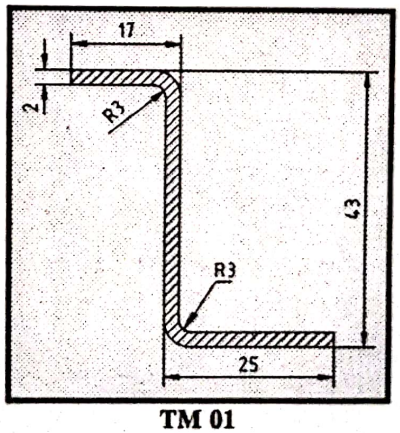

TM 01

Scanned with OKEN Scanner

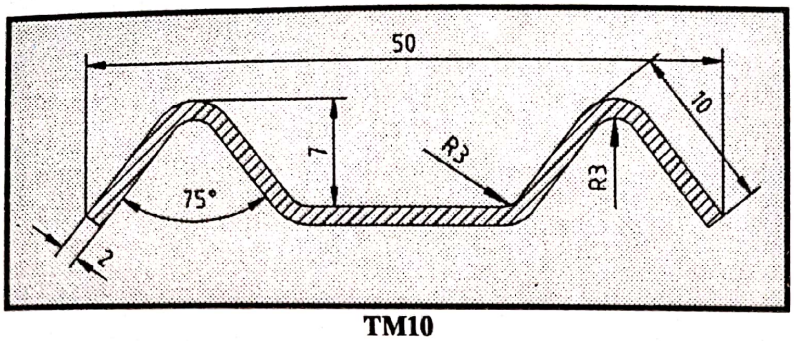

TM10

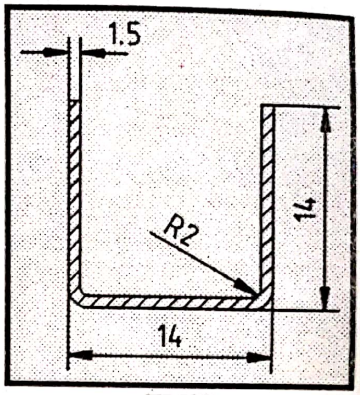

TM08

$G_H = 0{,}495$ kg/mL ?

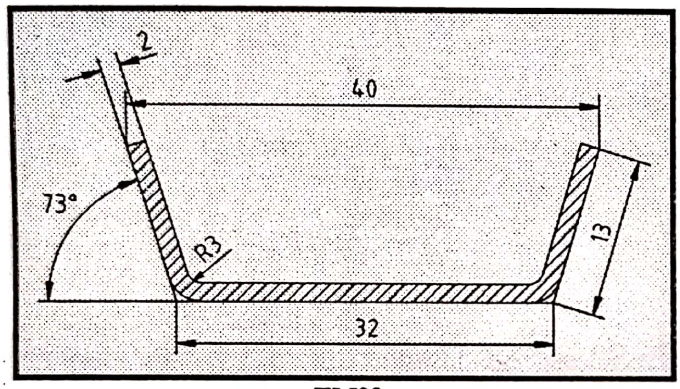

TM09

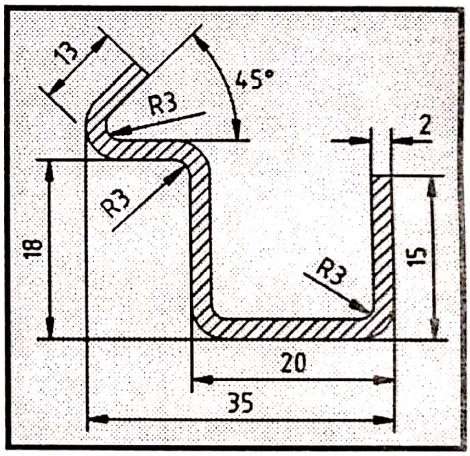

TM17

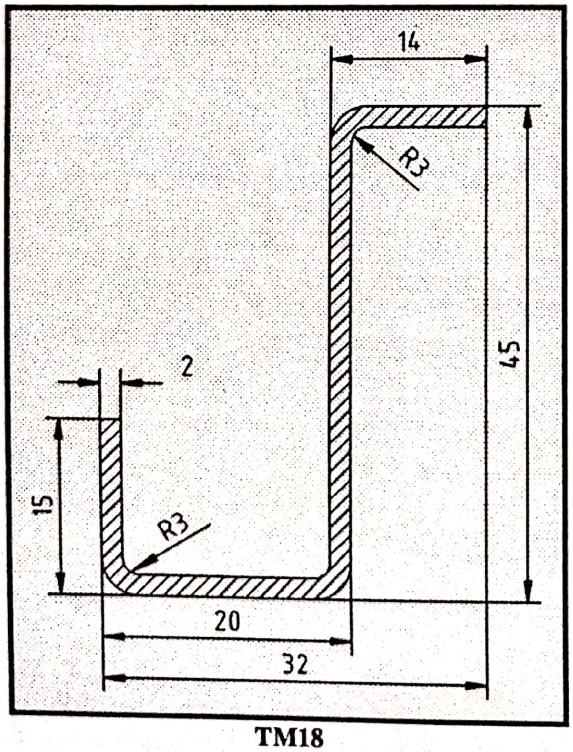

TM18

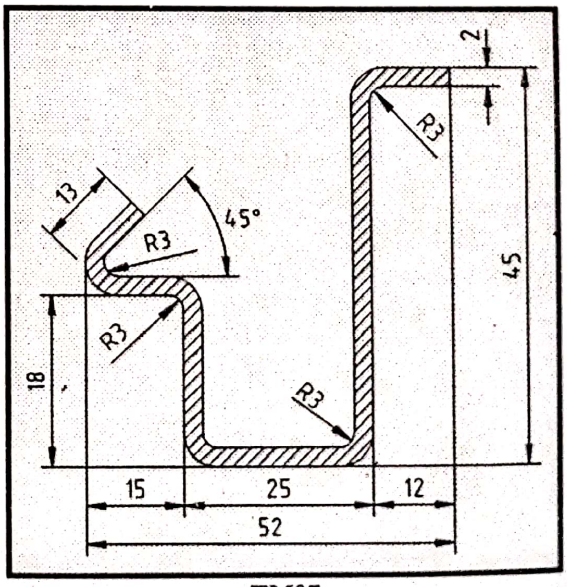

TM07

Scanned with OKEN Scanner

PROFILE SPECIALE PENTRU AUTOVEHICULE
SPECIAL PROFILES FOR MOTOR VEHICLES
STAS 11584-84

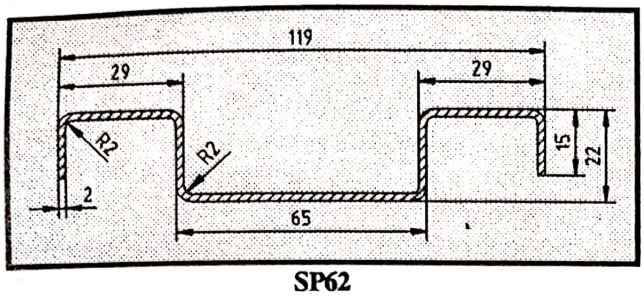

SP62

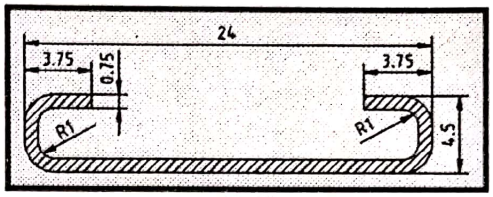

SP68

Profil	g
SP66	1.25
SP87	1

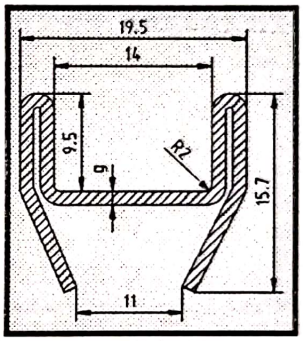

SP66, SP87

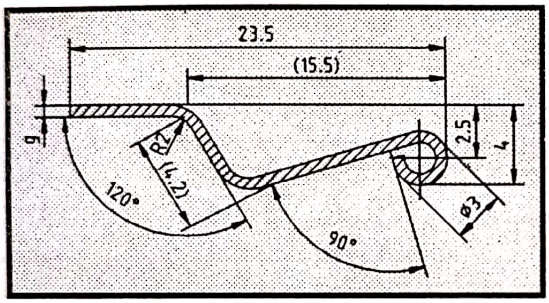

SP70, SP94

Profil	g
SP70	0.6
SP94	0.8

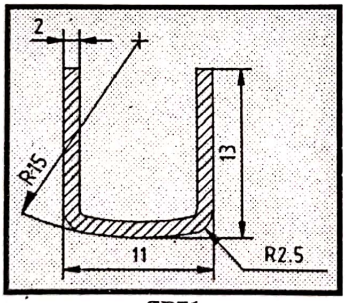

SP71

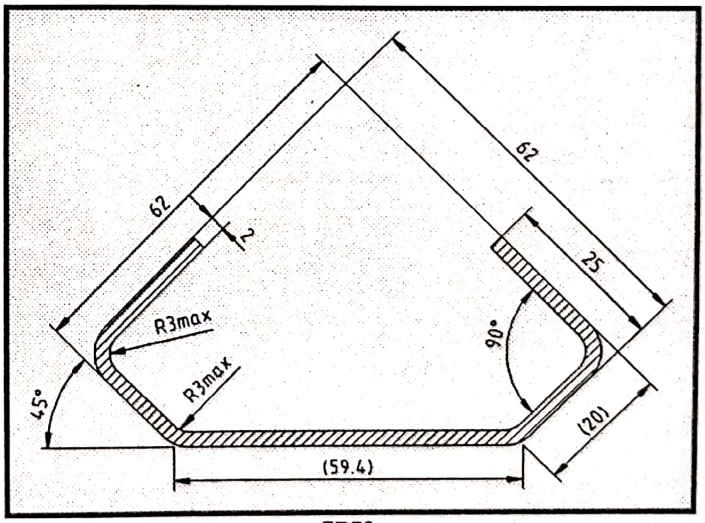

SP72

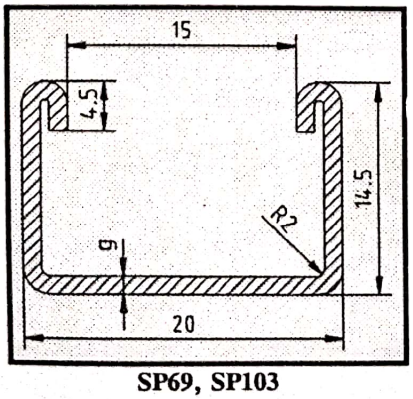

SP69, SP103

Profil	g
SP69	1.25
SP103	1

Scanned with OKEN Scanner

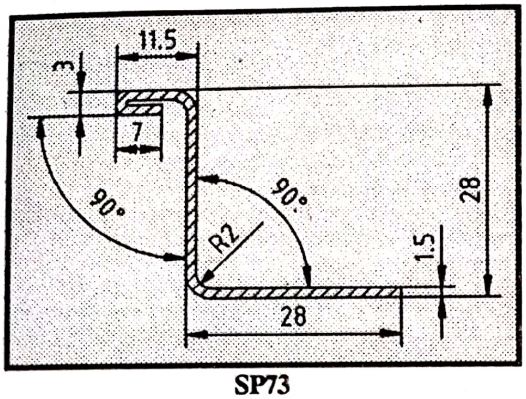

SP73

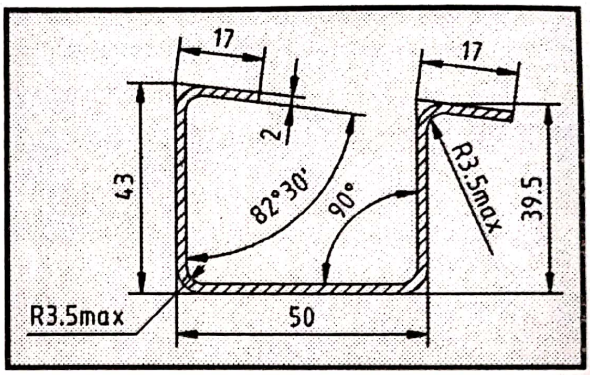

SP76

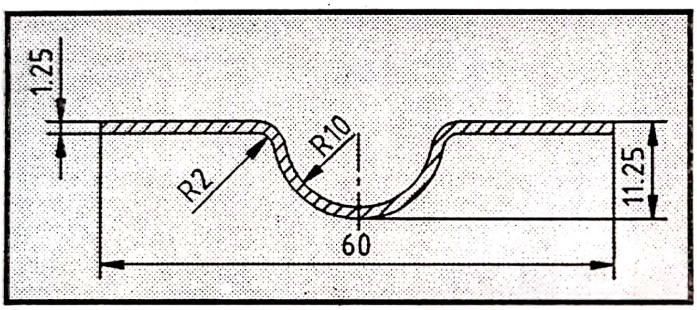

SP75

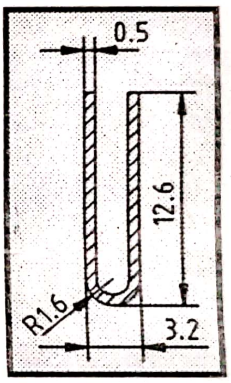

SP74

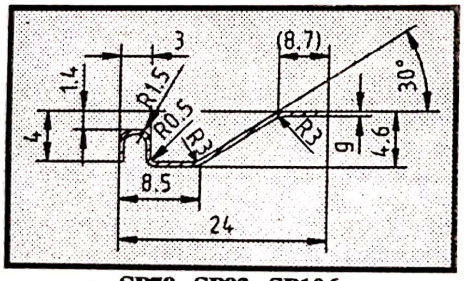

SP79, SP93, SP106

Profil	g
SP79	0.6
SP93	0.8
SP106	0.7

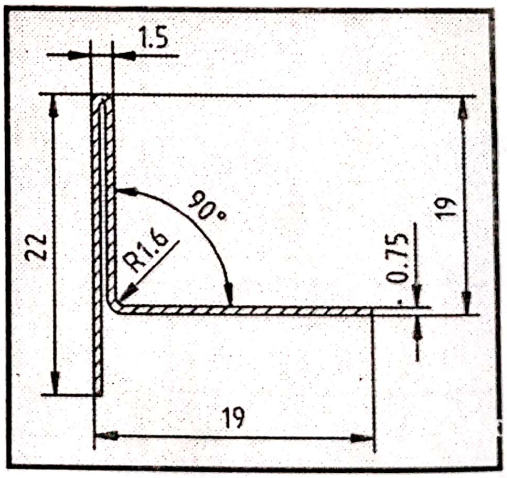

SP83

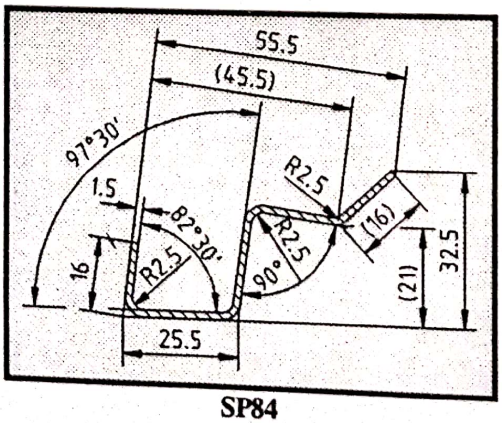

SP84

Scanned with OKEN Scanner

PROFILE CU DESTINAŢIE SPECIALĂ
PROFILES WITH SPECIAL DESTINATION
STR 516-90

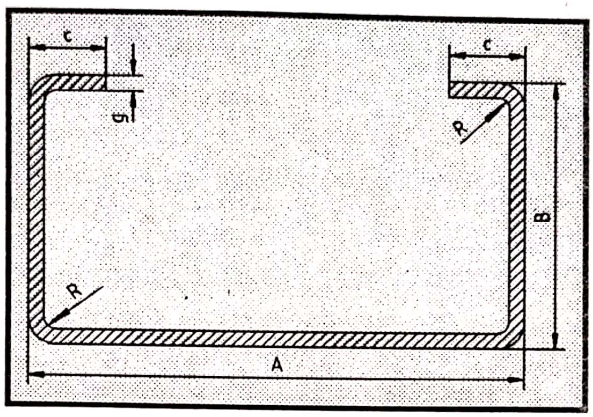

Profil Profile	A	B	C	g	R
SP 5	85	50	15	2	2
SP 6	100	44	20	3	3
SP 7	120	60	20	3	3
SP 46	160	80	35	5	10
SP 48	60	44	15	2	3
SP 50	160	80	35	3.5	8
SP52	135	60	25	3	8

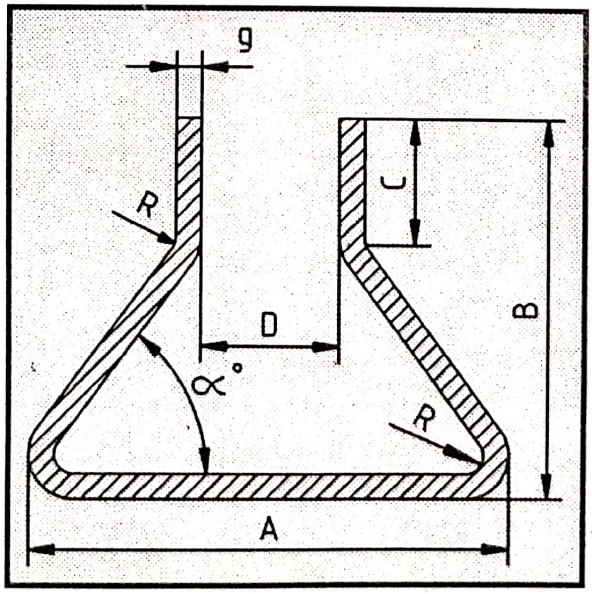

Profil Profile	A	B	C	D	g	R	α°
SP 44	83	57	10	13	3	4	50°
SP 55	83	57	10	13	2	4	50°
SP 102	83	57	10	13	3.5	4	50°

Scanned with OKEN Scanner

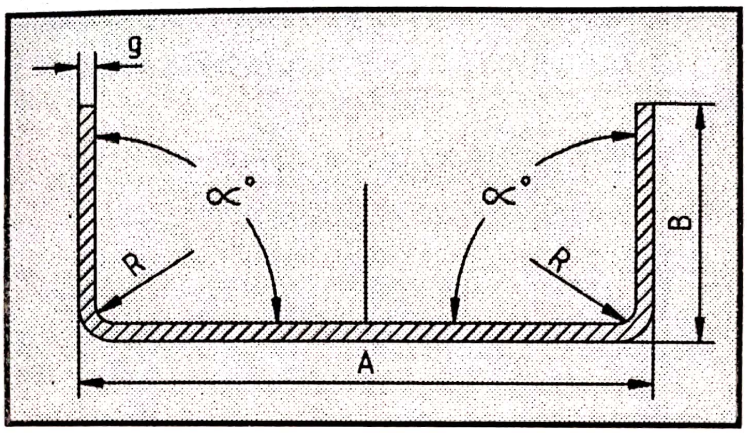

Profil Profile	A	B	g	R	α°
SP 58	100	40	2	2	88°
SP 64	100	40	2.5	2	88°

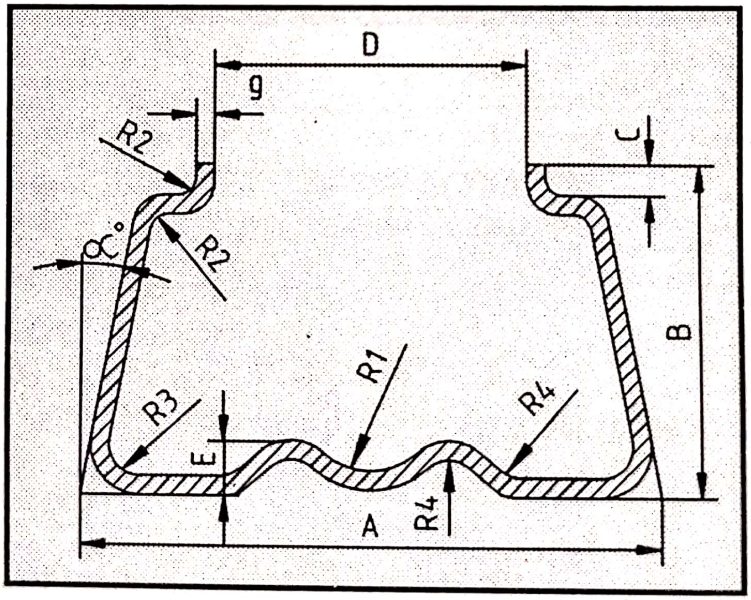

Profil Profile	A	B	C	D	E	g	α°	R_1	R_2	R_3	R_4
SP 59	91	46	8	56	7	2	11°	17.5	2.5	3.5	7
SP 65	91	46	8	55	7	2.5	11°	17.5	2.5	3.5	7

Scanned with OKEN Scanner

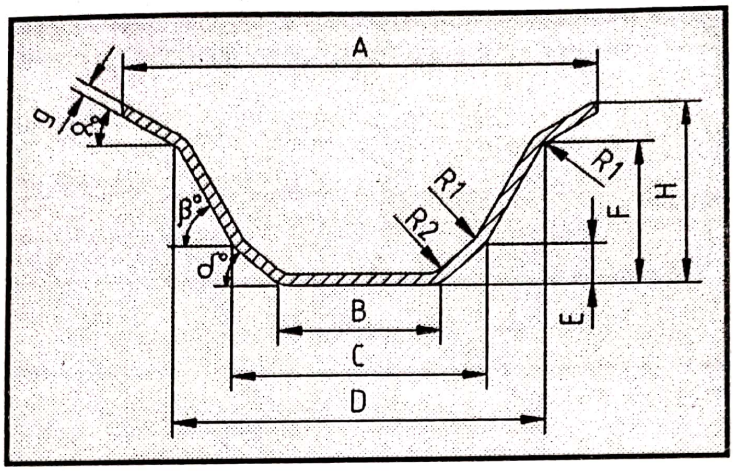

Profil Profile	A	B	C	D	E	F	g	H	α°	β°	δ°	R_1	R_2
SP 24	220	76	137	195	25.8	71.3	3.0	77.6	26°50'	57°30'	40°30'	0.5	2.0
SP 85	220	76	137	195	26.0	67.4	2.5	76.0	27°	55°	40°30'	2.5	2.5

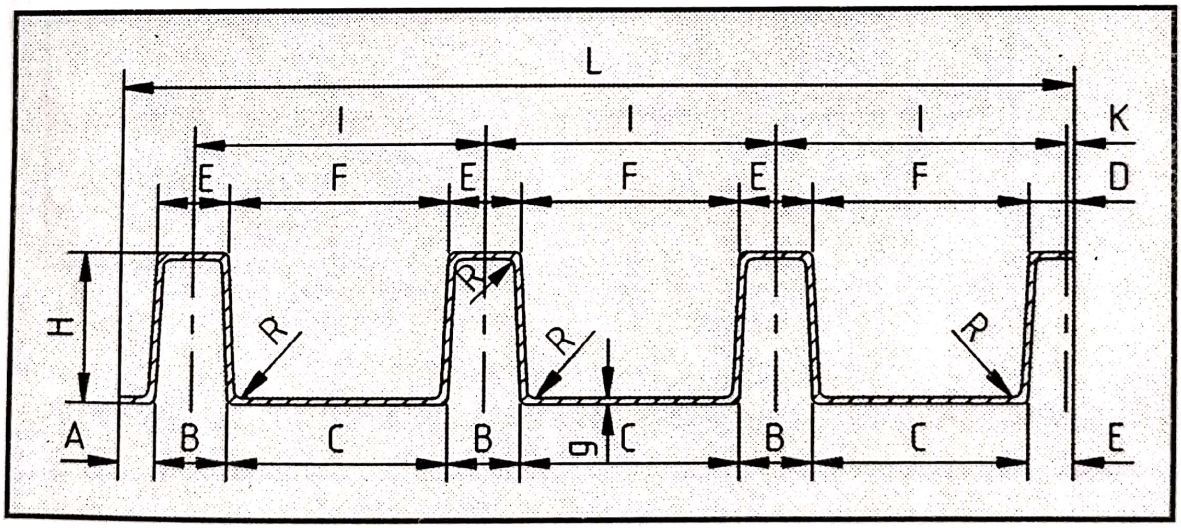

Profil	A	B	C	D	E	F	g	H	I	K	L	R
SP 89	20	40	170	25	30	180	0.75	60	210	10	680	3
SP 90	20	40	170	25	30	180	1	60	210	10	680	3
SP91	20	40	170	25	30	180	1.25	60	210	10	680	3
SP92	20	40	170	25	30	180	1.5	60	210	10	680	3

Scanned with OKEN Scanner

SP45

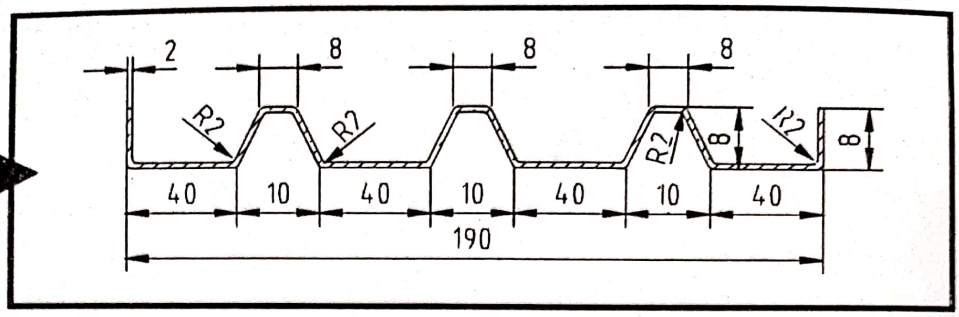

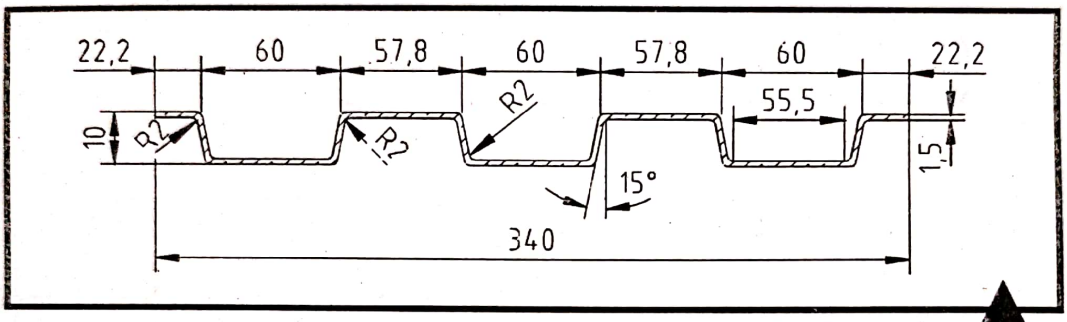

SP53

SP81

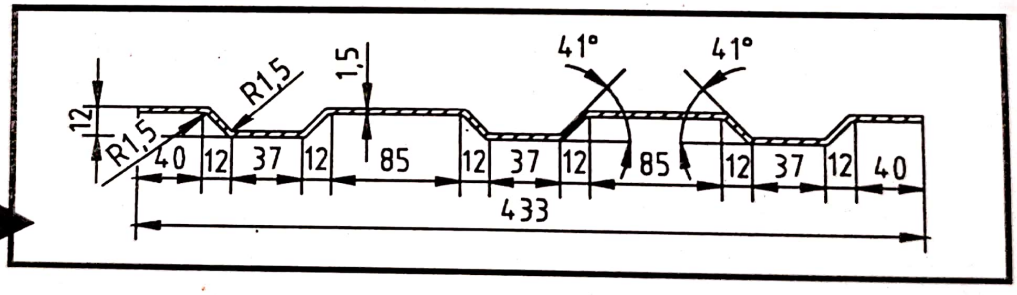

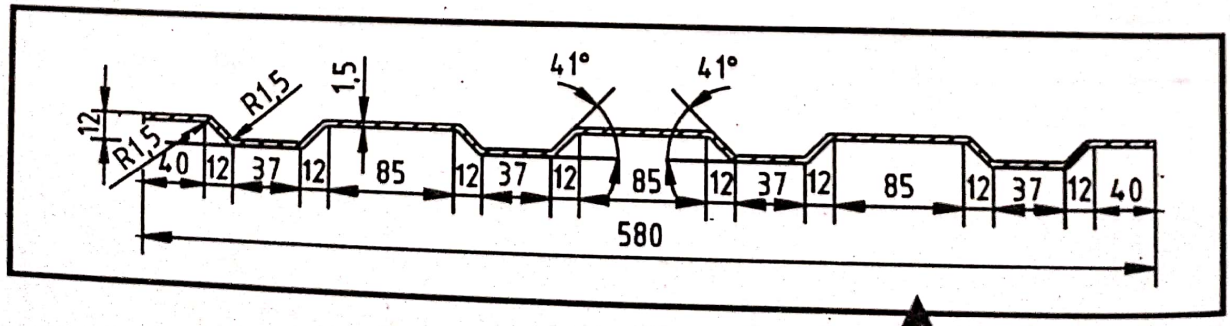

SP82

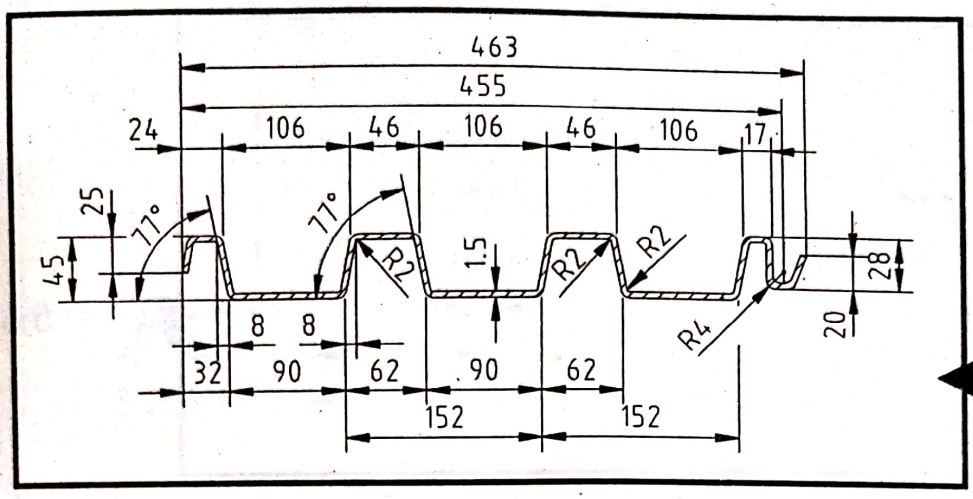

SP88

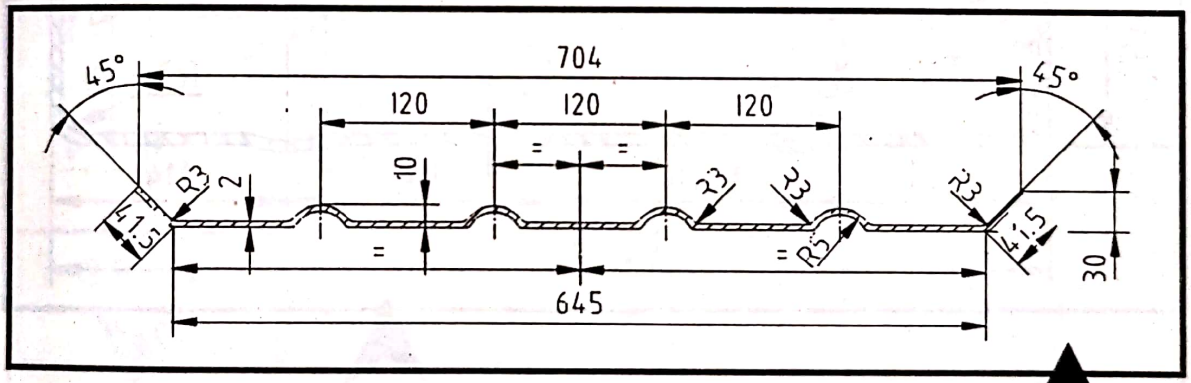

SP104

SP117

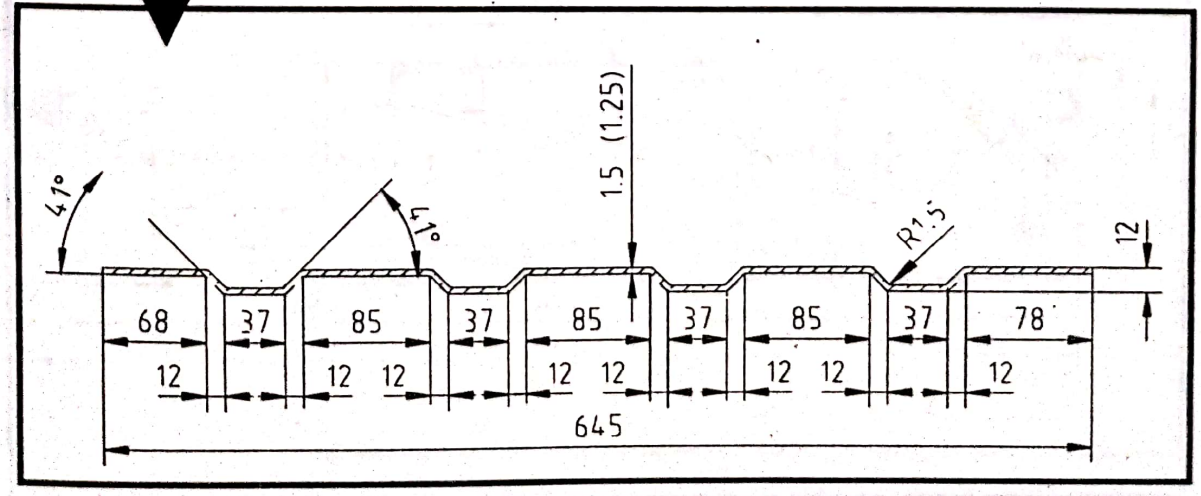

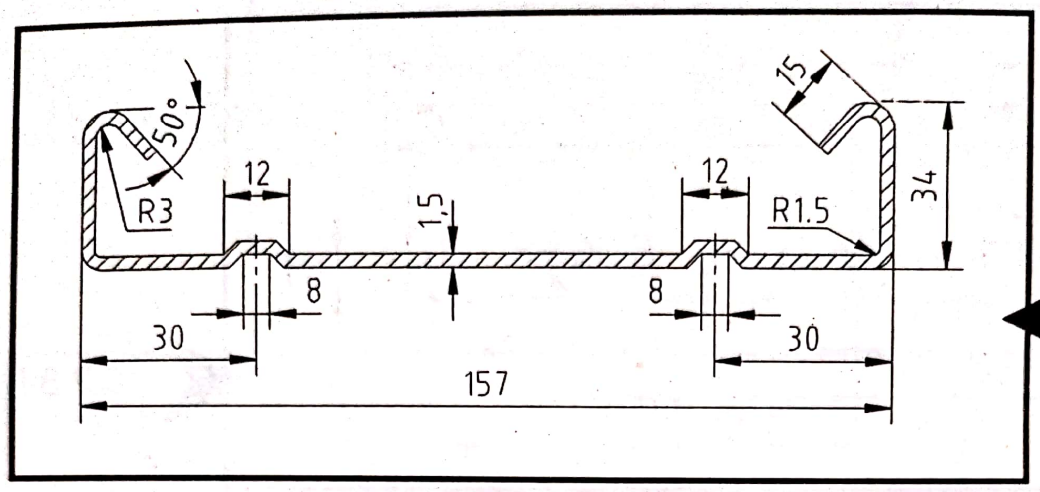

SP56

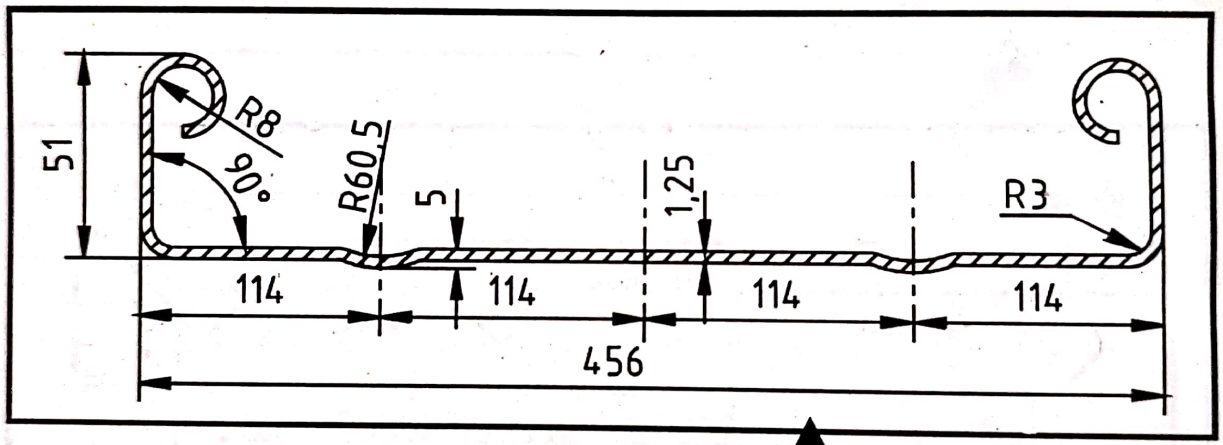

SP96

SP119

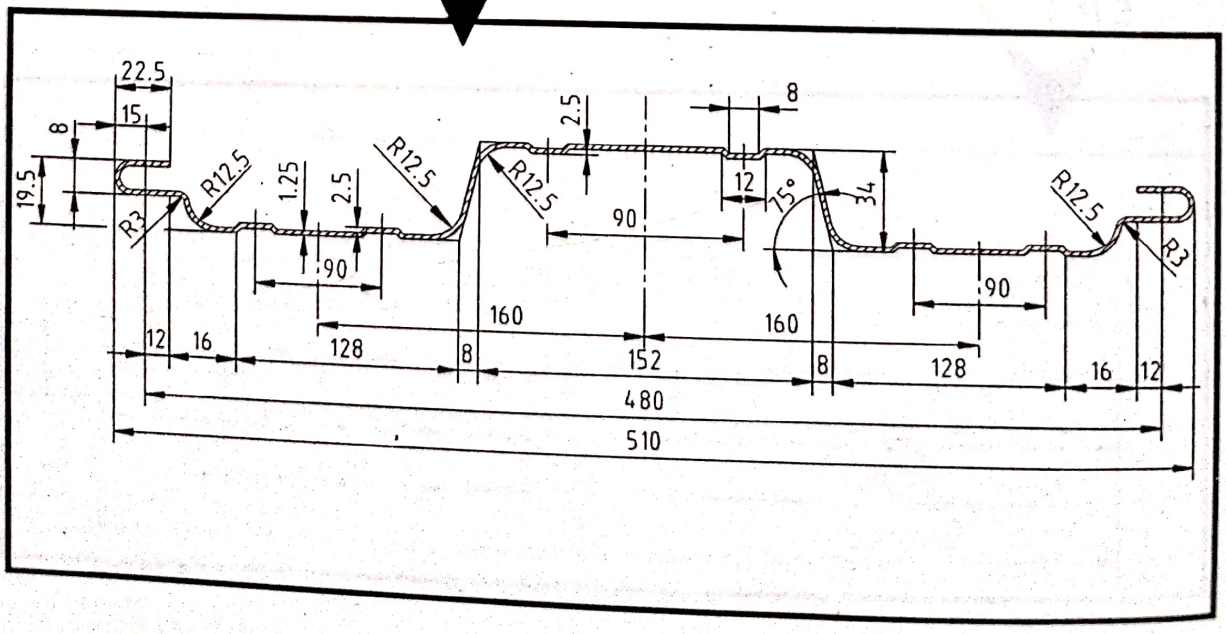

Scanned with OKEN Scanner

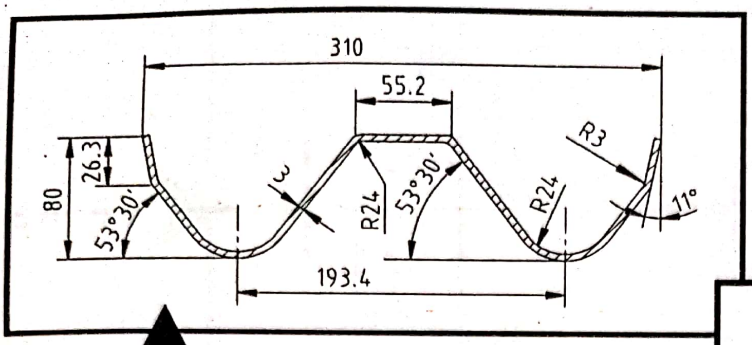

SP61

SP47

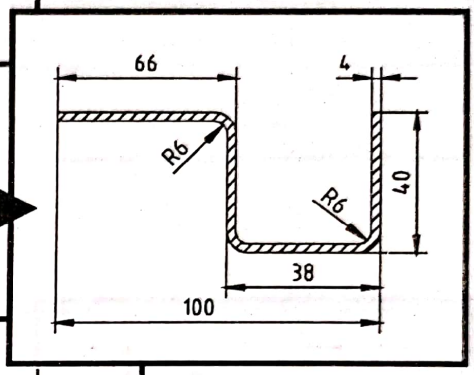

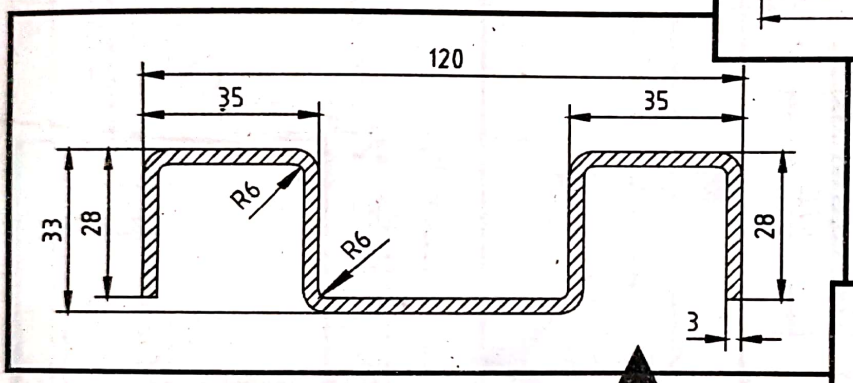

SP51

SP49

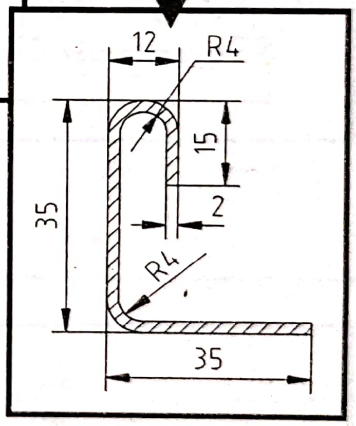

SP54

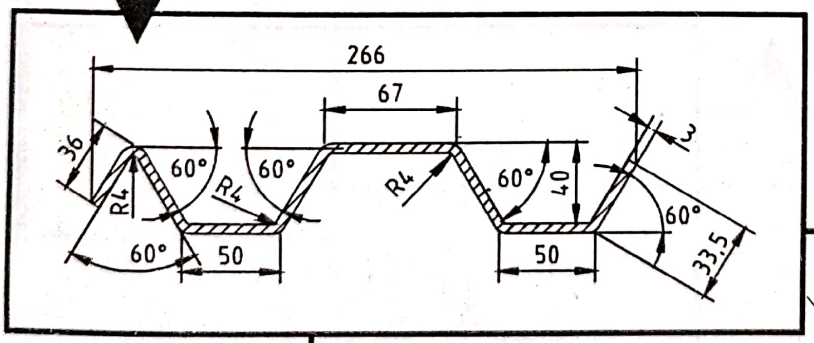

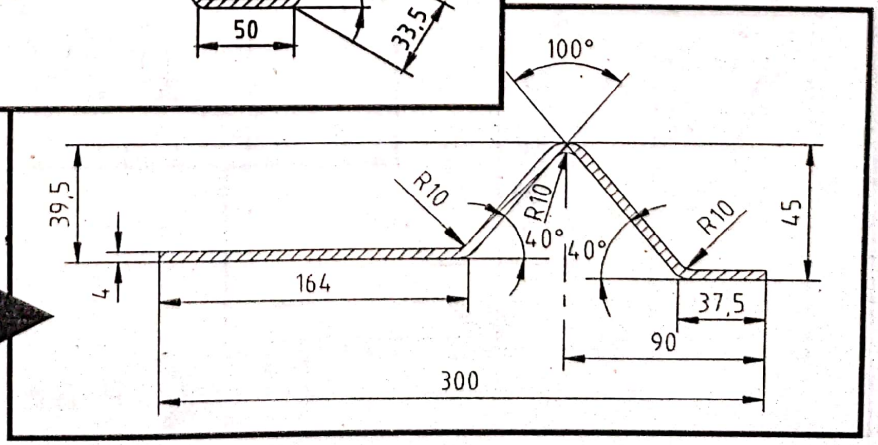

SP57

Scanned with OKEN Scanner

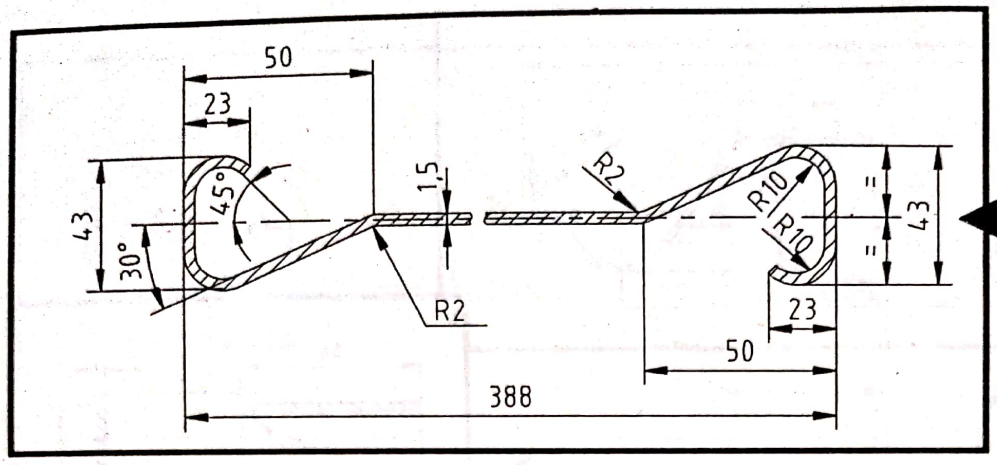

SP 63

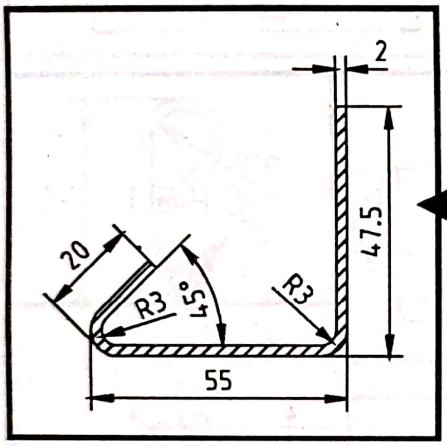

SP 95

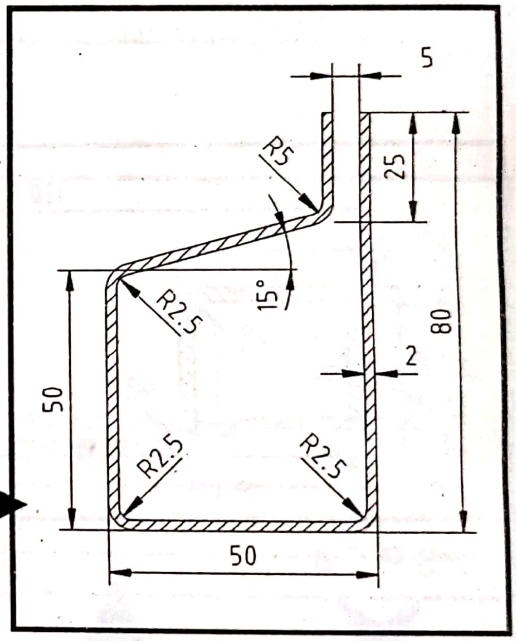

SP 78

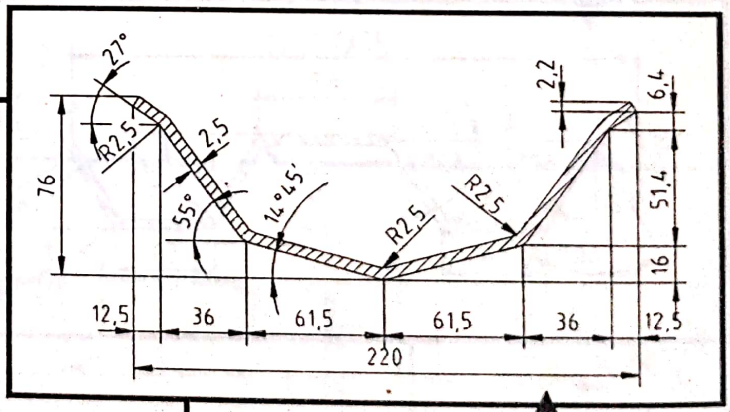

SP 80

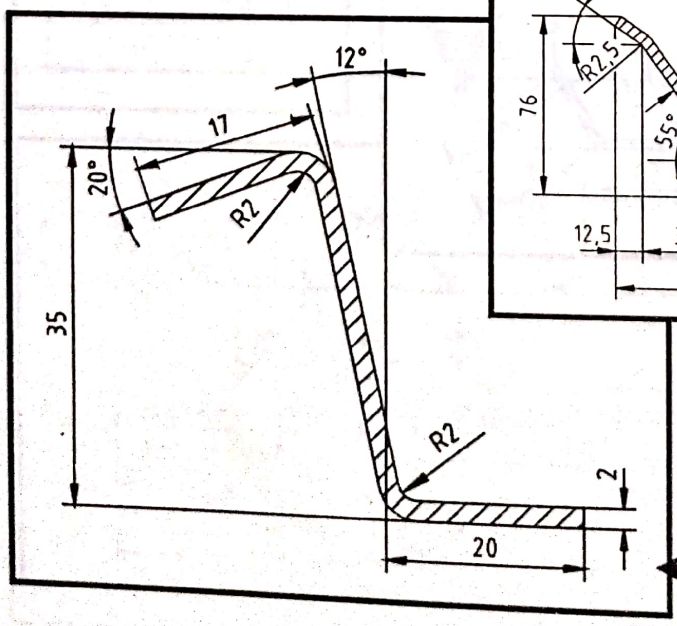

SP 86

Scanned with OKEN Scanner

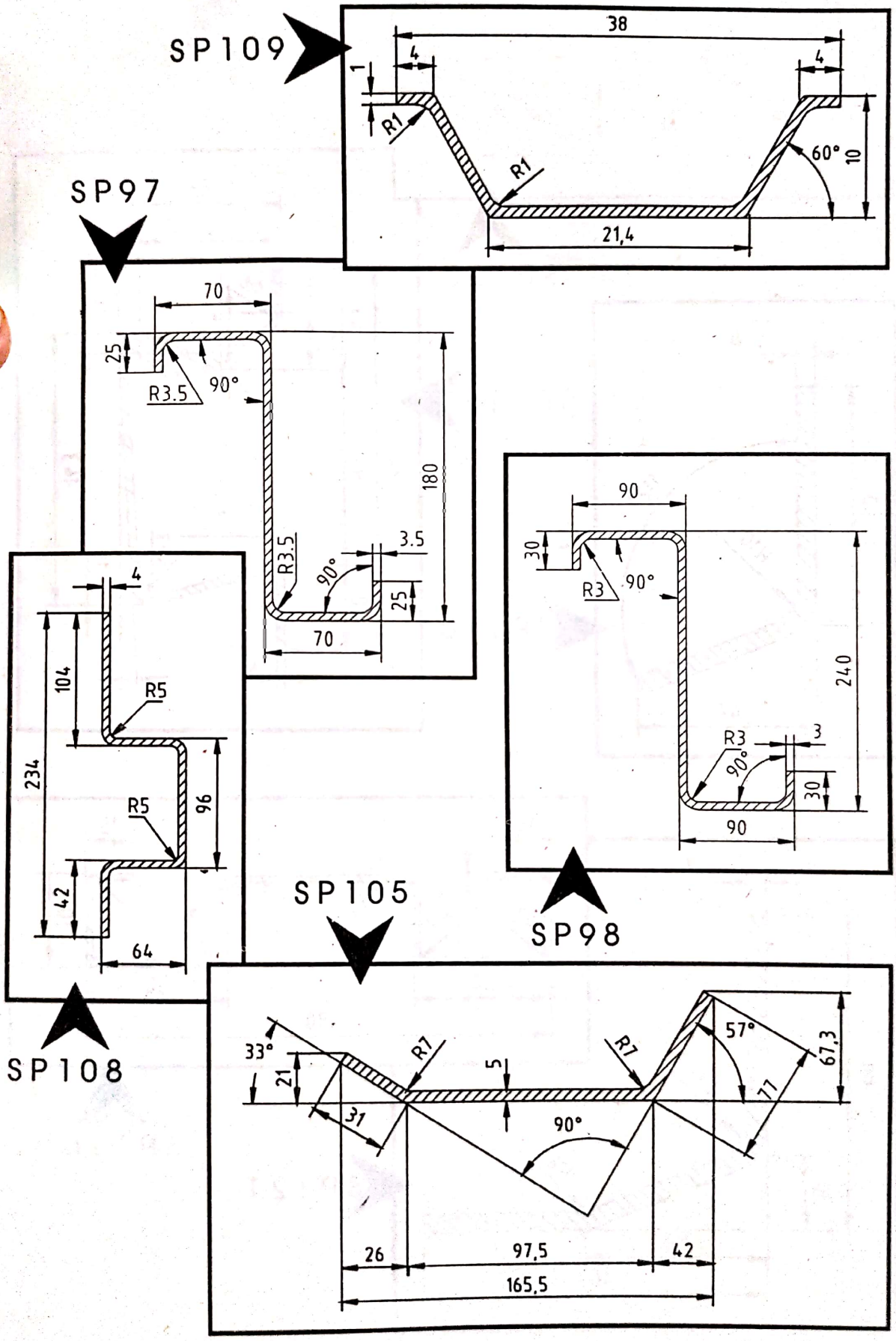

Scanned with OKEN Scanner

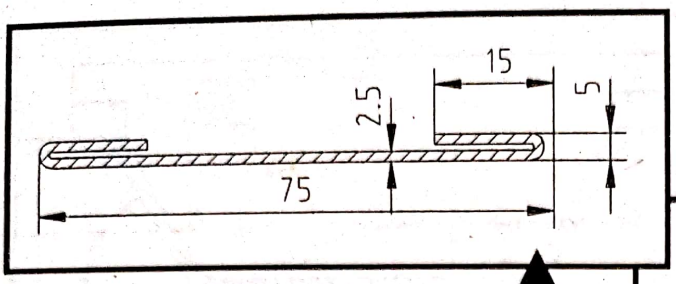

SP120

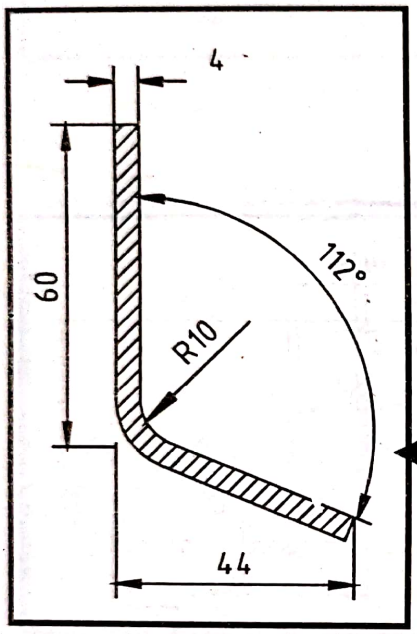

SP113

SP110

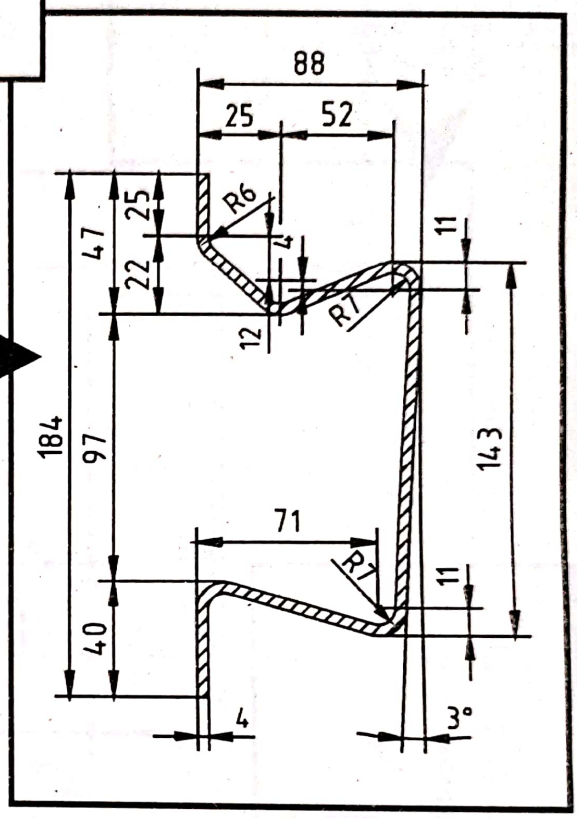

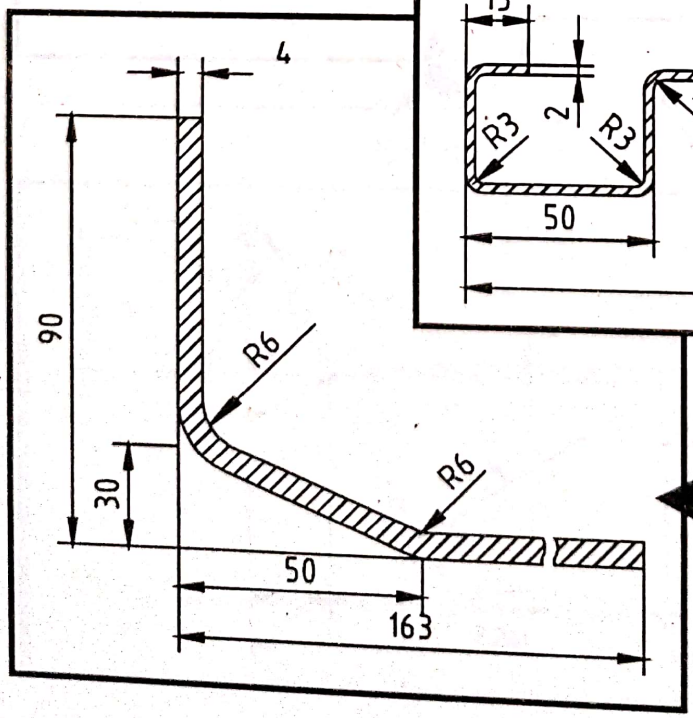

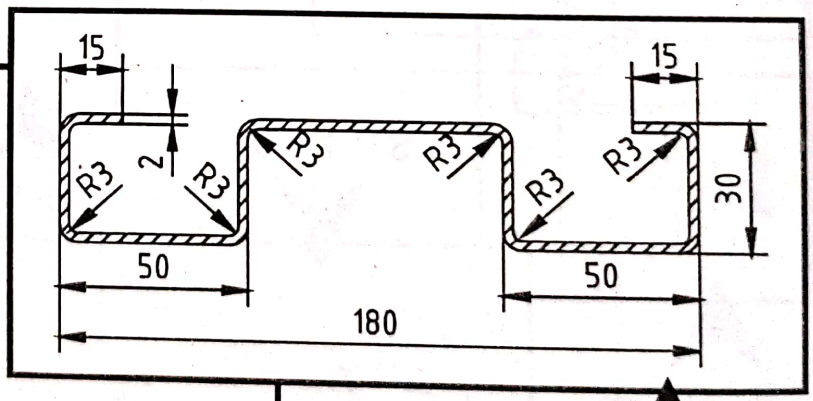

SP118

SP121

Scanned with OKEN Scanner

Realizat de ABACAB SRL în colaborare cu
Serviciul tehnic al SC TEPRO SA
Tipărit sub comanda 152
SC „DOSOFTEI" SA Iaşi
str. Sf. Lazăr nr. 49

Scanned with OKEN Scanner

1963 -1993

30 de ani de activitate

IAŞI - ROMÂNIA

Şoseaua Chişinăului nr. 132
Telex 22297
Fax 098/125919
Telefon 098/ 136664
136320
130371
130720
Nr. reg. comerţ J22-278-91
Cod fiscal 1973479

Scanned with OKEN Scanner